Chapter 7

Variable Frequency Drive Applications in HVAC Systems

Yunhua Li

Additional information is available at the end of the chapter

http://dx.doi.org/10.5772/61782

Abstract

Building heating ventilation and air-conditioning (HVAC) systems are designed to operate at the peak load, which only occurs in a very short period of time throughout the year. One of the most effective ways to improve building energy efficiency is to utilize the variable frequency drives (VFDs). They are widely used in the HVAC field, including fans, pumps, compressors, etc. In a VFD-equipped system, the VFD adjusts the speed of one or more motors based on the system load requirements and operation schedule, resulting in a dramatic cut in energy consumption.

This article systematically introduces the application of VFDs in HVAC systems, including heating systems, ventilation systems, cooling systems, and refrigeration systems in commercial and industrial buildings. First, the principles are introduced for VFDs, variable speed fans, pumps, and compressors. Next, the control application of VFDs on each type of system (equipment) is summarized. In this section, the schematic diagram of each system as well as the detailed control strategy for each application is presented. In addition, the application of VFD on fault detection and diagnosis (FDD) is introduced. Lastly, some technical issues and concerns are discussed with potential solutions provided.

Keywords: Variable frequency drives, HVAC systems, control, energy efficiency, savings

1. Introduction

Electric motor-driven systems (EMDS) are the largest electrical end users and account for 43–46% of all global electricity consumption [1]. In the United States, HVAC and refrigeration applications consume 91% of motor-driven energy use in the residential sector and 93% in the commercial sector [2]. Reducing unnecessary energy consumption is the most direct and

effective way to improve building energy efficiency. The increasing advancement of electronic and control technology greatly improves the performance of variable speed drives. Variable frequency drives (VFDs) are being used in the HVAC industry more frequently and in more applications. They can modulate the motor speed very smoothly within a wide range. Reduced motor speed provides a significant reduction in motor power.

In general, a VFD can be used in a variety of applications where the load is variable, such as fans, pumps, and compressors. The energy savings for fans and pumps are about 30–50% over conventional speed applications, and up to 35% for compressors. In the following sections, the working principle of the VFD is introduced and its applications on HVAC systems are presented. Lastly, the current issues and concerns about VFDs are discussed with potential solutions provided.

2. Principles

2.1. VFD

A VFD is an electrical device used to control the rotation speed of an alternating current (AC) electric motor by adjusting the frequency of the electrical power supplied to the motor. It is also called pulse-width-modulated drive (PWM drive), adjustable-speed drive (ASD), adjustable-frequency drive (AFD), AC drive, inverter drive [3], or variable voltage variable frequency (VVVF) drive.

Most VFDs used in HVAC applications are inverters using sine-coded PWM technology. As shown in Figure 1, a VFD works by converting the incoming AC power to DC power using a diode bridge rectifier, then passing the filtered, smoothed the voltage onto the inverting section, and finally controlling voltage and frequency sent to the motor by high-speed bipolar transistors [4].

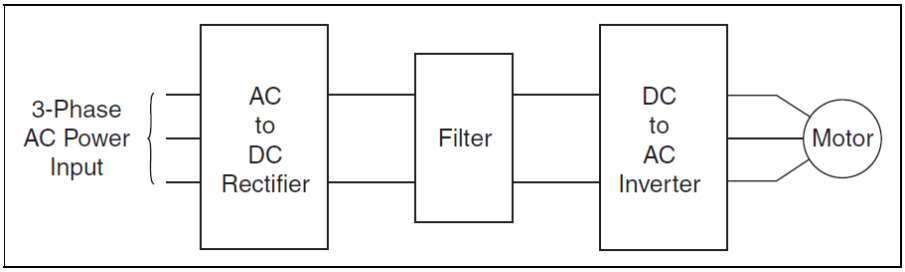

Figure 1. Schematic diagram of a variable frequency drive [4]

The output voltage is adjusted by changing the width and number of the voltage pulse as shown in Figure 2, whereas the output frequency is varied by changing the length of the cycle.

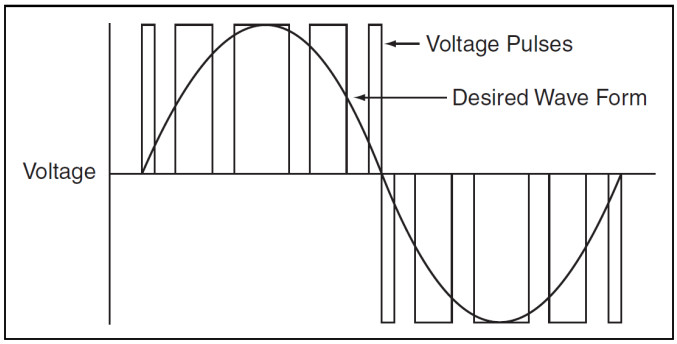

Figure 2. Sine-coded PWM waveform [4]

A VFD can provide the follow benefits:

- Soft-start capability reduces the inrush current when motors start up, and thereby reduces the mechanical stress on the motor and improves the motor reliability.
- Step-less regulation for motor speed electrically.
- Reduces the motor power consumption significantly with proper controls.
- Improves the power factor of the entire drive system including VFD and motors.
- Metering and monitoring system performances.

These advantages boost the widespread utilization of VFDs in a variety of industrial processes including the HVAC field. Although equipping a VFD in a new system or existing system increases the initial investment, the reduced VFD cost combined with the increased energy savings derived from a VFD result in short payback period, which is usually less than three years.

2.2. Variable speed fans and pumps

Variable speed fans and pumps are the fans and pumps equipped with VFDs. Since their speeds vary as the frequency of supply power changes, these pumps and fans are also called variable frequency fans and pumps. The operating characteristic of centrifugal fans and pumps makes them the excellent candidates for VFD applications. According to the fan and pump affinity laws, the fan or pump power has a cubic relationship with the motor speed. Therefore, significant power savings could be achieved by reducing the motor speeds with the proper controls.

The variables related to the fan or pump performance are impeller diameter D, rotation speed N, gas/water density ρ, volume flow rate Q, pressure P, power W, and mechanical efficiency η. In a typical application, the fan or pump diameter is constant. The airflow or water flow, fan or pump head, and power solely relies on the speed. These relations are presented by the following equations [3] (where equations (1) and (2) denote two working conditions):

$$\frac{Q_1}{Q_2} = \frac{N_1}{N_2} \tag{1}$$

$$\frac{P_1}{P_2} = \left(\frac{N_1}{N_2}\right)^2 \tag{2}$$

$$\frac{W_1}{W_2} = \left(\frac{N_1}{N_2}\right)^3 \tag{3}$$

Equation (3) clearly indicates how the speed change affects the power change. For example, 50% speed reduction results in 87.5% power reduction theoretically. There are several types of air and water systems including the single-duct variable air volume (SDVAV) system, dual-duct variable air volume (DDVAV) system, single-zone system, multi-zone system, primary and/or secondary chilled water system, and the hot water system. Each type of system requires specific control strategy rather than a fixed low-speed operation without modulation.

2.3. Variable speed compressors

Variable speed compressors or variable frequency compressors are compressors equipped with VFDs. In the HVAC industry, there are several types of compressors associated with the refrigeration systems: reciprocating, screw, scroll, and centrifugal. All of them are viable components for a VFD application. The commonly used working media includes air and refrigerant. Air compressors are frequently used in industrial processes as a power source for pneumatic control systems. Refrigerant compressors are typically used in air conditioners, unitary air-handling units (AHU), or chillers in residential and commercial buildings. Significant progresses on the theoretical study and applications on variable speed compressors were made during the past thirty years. As early as 1982, Itami et al. [5] conducted an experimental study on the performance and reliability of a rotary compressor and reciprocating compressor combined with frequency inverters. In 1996, Qureshi and Tassou [6] presented a review of application of variable speed capacity control on refrigeration systems. It pointed out that VFD applications on compressors were largely restricted to small-capacity air-conditioning units thus far, with only a small amount of applications to medium-range capacity units. More research work was still required. Since then, dramatic studies were conducted on applications of variable speed drives in HVAC systems [7–9].

Unlike other types of compressors, centrifugal compressors have similar energy performance as centrifugal fans and pumps. A scroll compressor is especially suitable for a VFD due to its intrinsic structural design. Scroll compressors and reciprocating compressors are the most commonly used types on rooftop units (RTUs) and heat pumps (HPs) units. For the majority

of existing constant speed compressors, installing a VFD on the compressor is the most feasible way. In recent years, some original equipment manufacturers (OEMs) of compressors, such as Emerson and Danfoss, have already manufactured variable speed compressors. Several large HVAC manufacturers, such as Trane, Carrier, McQuay, Lennox, AAON, York, and Emerson, started equipping variable speed compressors in their new products, such as RTUs, HPs, computer room air-conditioning (CRAC) units, or chillers.

Unlike fans and pumps, the scroll and reciprocating compressors usually do not have a cubic relationship between power and frequency. Figure 3 shows an approximate linear relationship between power and frequency for a 5-ton RTU with a scroll compressor, based on the experimental study [10]. This relationship clearly demonstrates how the compressor power changes with frequency. The linear correlation is also helpful to develop a new, simpler compressor model [11].

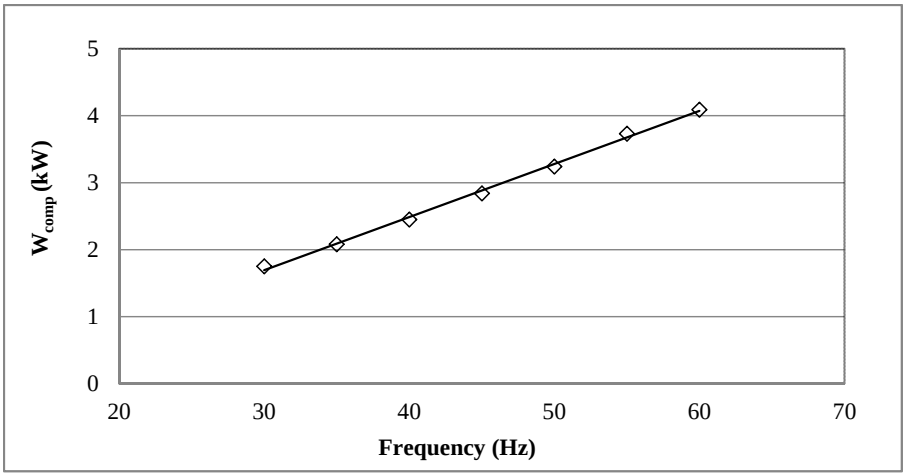

Figure 3. Relationship between compressor power and frequency for a 5-ton RTU

3. VFD applications

3.1. Air systems

3.1.1. Single-zone Variable Air Volume (VAV) system

Single-zone VAV system is the simplest air system. The VAV system mainly includes outdoor air and return air dampers, filter, heating and cooling coils, and a supply fan. Some units may also have a preheat coil, bypass damper, and return fan. Figure 4 presents a typical single-zone VAV system.

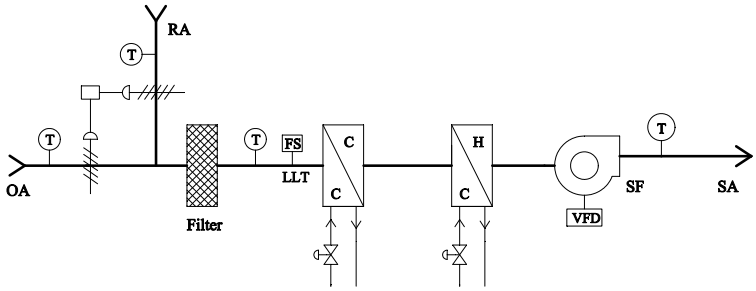

Figure 4. Typical single-zone VAV system

Typically, a single-zone air-handling unit is operated to control the temperature of only one space. The conventional method is to integrate the cooling and heating valve to control the space cooling and heating temperature set point. For a VFD-equipped supply fan, the fan speed can be modulated to maintain the space temperature set point, whereas the cooling and heating coil valves are used to control the supply air temperature (SAT).

Since the 2010 edition of ASHRAE Standard 90.1 [12], some requirements were added for single-zone VAV system control. It required that single-zone AHU and fan coil units with chilled water cooling coil and supply fan with motor greater than 5 hp shall have supply fans controlled by two-speed motors or VFD. Similarly, all the AHUs and AC units with direct-expansion (DX) cooling coil and a capacity ≥110,000 Btu/h that serve single zones shall have their supply fans controlled by the two-speed motor or VFD. These requirements are mandatory.

There are many successful case studies on VFD applications for single-zone units in projects. Li et al. [13] applied the VFD technology to a dozen single-zone systems by installing a VFD on each of them. They demonstrated that installing VFDs on supply fans in a series of single-zone units can save much more energy than running half of the units at constant speeds and shutting off the remaining half.

3.1.2. Single-duct VAV system

The single-duct VAV system is the most popular system, which comprises a main AHU, ductwork and a number of terminal boxes. The air-handling units are comprised of an outdoor air damper and return air damper, filter, preheating coil, cooling coil, and safety devices. Figure 5 shows a typical SDVAV system.

In a single-duct VAV system, VFDs are installed on the supply fan and return fan. Typically, the supply fan speed is modulated to maintain the duct static pressure at its set point. As the system load is reduced, the VFD speed decreases to maintain the same set point. Meanwhile, the set point need not be kept at a constant value. With the system load reduced, less airflow is needed to deliver to the space. The static pressure set point could be reset to meet the condition. This set point can be reset based on the VFD speed or supply fan airflow [14].

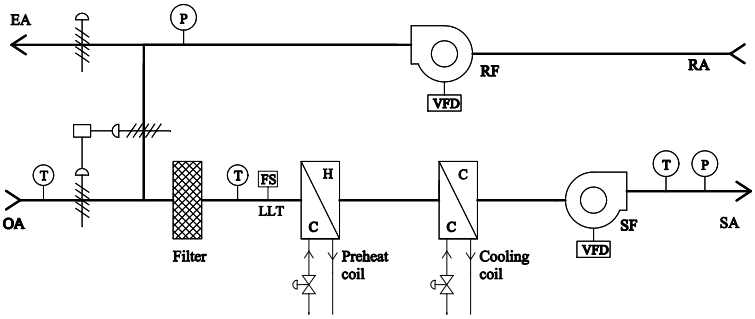

Figure 5. Typical single-duct VAV system

For the return fan, there are several control methods: modulating the return fan speed to maintain (a) return duct static pressure or (b) building differential pressure. However, these controls are not reliable due to the pressure measurement. A new control method is using a volume tracking method to maintain the airflow difference between the supply and return fans.

3.1.3. Dual-duct VAV system

A dual-duct variable air volume (DDVAV) system handles hot and cold air separately and delivers them through hot and cold ductwork. The hot air and cold air are mixed at the terminal box and then supplied to the space. There are two types of DD system: the single-fan dual-duct system and the dual-fan dual-duct system. The first one has a supply fan delivering the airflow to both hot and cold decks. The second one has a dedicated supply fan in each deck. The cold deck includes a cooling coil, whereas the hot deck is equipped with a hot water or steam coil. Figure 6 shows the schematic diagram of a single-fan DDVAV system.

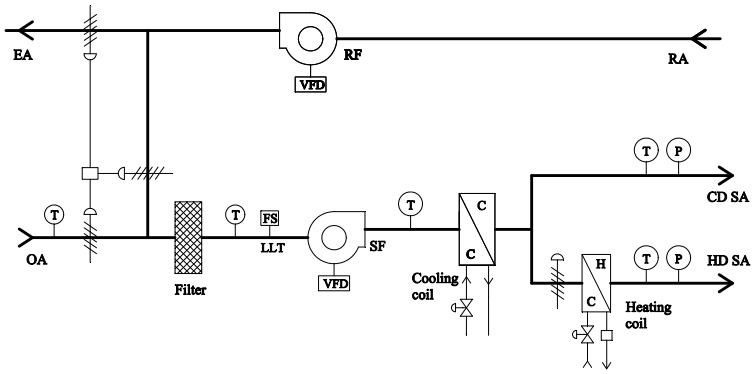

Figure 6. Single-fan DDVAV system schematic diagram

In a single-fan dual-duct VAV system, a VFD is installed on the supply fan. For a dual-fan dual-duct VAV system with separate supply fans for the hot and cold deck, a VFD is installed on each fan. If there is a return fan in this system as well, a VFD is also equipped on the return fan.

Typically, for a single-fan dual-duct system, the supply fan is modulated to maintain the cold deck static pressure, whereas the hot deck main damper is modulated to maintain the hot deck static pressure set point. For a dual-fan dual-duct system, each supply fan speed is modulated to maintain its own static pressure set point. Similarly, with single-duct VAV system, the return fan speed is modulated to maintain the airflow difference between the supply and return fans.

The energy savings of a dual-duct VAV system are often derived from the fan speed control and duct supply air temperature reset. Liu and Claridge [15] presented the models for the maximum potential energy savings by optimizing the hot deck and cold deck reset schedules, where 75% in potential savings can be expected.

3.1.4. Multi-zone system

A multi-zone system serves multiple zones with each zone having its own thermal requirement. Like a dual-duct system, one multi-zone system has cold and hot decks. However, the difference is that the cold air and hot air mixes at the outlet of air-handling unit before delivery to the space, whereas in a dual-duct system the hot air and cold mixes at the terminal boxes. Figure 7 shows the schematic diagram of a typical multi-zone system where a VFD is installed on the supply fan.

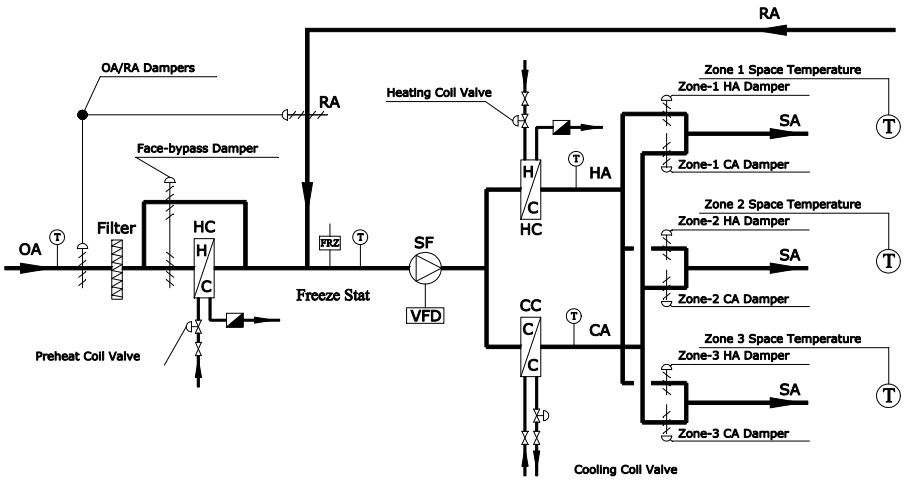

Figure 7. Multi-zone VAV system (three zones)

In a multi-zone system, the supply fan speed is modulated to maintain the discharge air static pressure or the temperature in the worst zone at its set point. The zone damper is modulated to maintain each zone temperature set point.

3.1.5. Exhaust air system

An exhaust air system is often associated with one air-handling unit, make-up unit, or fresh air unit. An exhaust air system is applicable for several types of facilities, such as kitchens, cafeterias, and laboratories in the hospital, just to list a few. They require enough fresh air and associated exhaust air. Proper exhaust airflow should be provided to satisfy the building or space pressure requirement. As the airflow delivered by air-handling unit is variable, the exhaust airflow is adjustable accordingly. Figure 8 shows an exhaust air system where a VFD is installed on the exhaust fan.

In this exhaust air system, the VFD is modulated to maintain the suction air pressure set point, or the differential airflow between the supply and exhaust air to maintain the required building pressure.

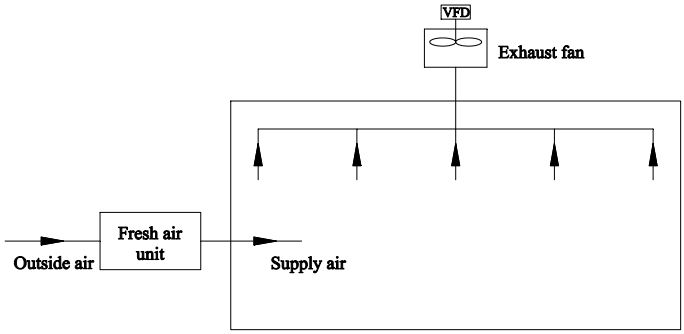

Figure 8. Exhaust air system

3.2. Water systems

The major water systems in HVAC system include chilled water system, condenser water system, and hot water system. Each system has dedicated pumps circulating water through a closed or an open loop. VFDs can be installed on these systems, which could reduce the pump energy consumption at partial load conditions.

3.2.1. Chilled water system and condenser water system

Chilled water system and condenser water system are two independent systems in the chiller plant. Figure 9 shows a typical chiller plant comprising these two loops. A chilled water system includes one or more chillers, chilled water pumps, and cooling coils. The cooling coils are usually located in the AHUs or fan coil units. There are two types of pumping system: primary-

only system and primary–secondary system. In a primary-only system, the chilled water pump circulates the chilled water through the evaporator of chillers and cooling coils. In a primary–secondary system, there are two loops. The primary pumps circulate chilled water through the chiller only, while the secondary pumps circulate the chilled water through buildings. Usually, there is one bypass pipe, which connects the primary and secondary water loops. Many investigations and case studies were conducted on the efficiency, reliability, and optimization of primary–secondary or primary-only chilled water systems [16–18]. When VFDs are installed on chilled water pumps, how to operate pumps under the maximum efficiency point for single or multiple pumps are one of the study topics.

In a chilled water system, as seen in Figure 9, the cooling load of each coil varies at different zones and times, making the required chilled water flow variable. The primary pumps are modulated to maintain the loop differential pressure while simultaneously maintaining the minimum water flow requirement for chillers. The secondary pump speeds are equal to the primary pump speeds. As the building cooling load reduces, the required chilled water flow decreases. Reduced pump flow results in great pump power savings.

In a condensing water system, the condensing water pump circulates the condensing water through the condenser of chillers and cooling tower. When a VFD is installed on the condensing water pump, the pump speed is adjusted to maintain the loop differential pressure (ΔP) or temperature difference (ΔT).

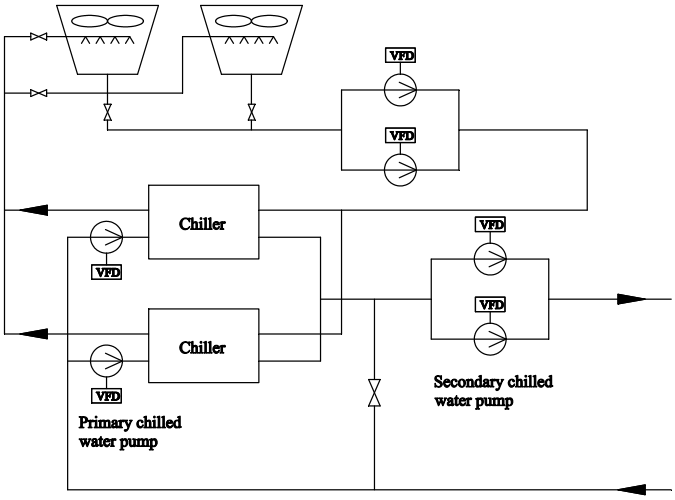

Figure 9. Chilled water and condenser water system

Furthermore, the VFDs could be installed on the fans of cooling tower. The fan speed is optimized to maintain the condensing water leaving temperature from the cooling tower.

3.2.2. Hot water system

The hot water system delivers the hot water from boilers or heat exchangers to the heating coils of air-handling units or terminal boxes inside the building. In traditional operation, the water pumps are running at full speed. The heating valves at the end users are modulated to control the airside temperature set point. Figure 10 shows a hot water system with VFD installed on both primary and secondary pumps. After installing of VFDs, the speed of secondary pump is often modulated to maintain the supply and return temperature difference or loop differential pressure. The speed of primary pump can track that of secondary pump and should be high enough to ensure sufficient water going through boilers.

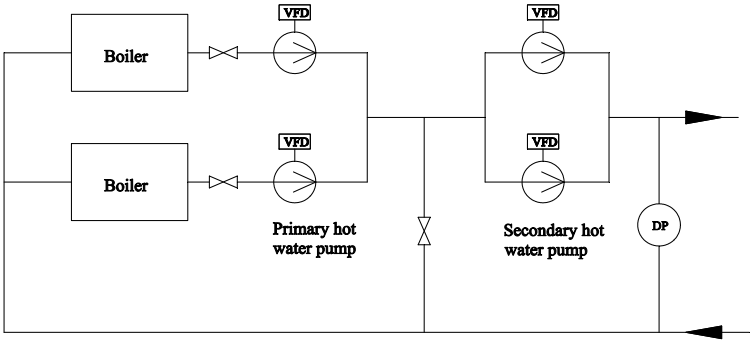

Figure 10. Hot water system

3.3. Air compressors

Compressed air has many applications in the manufacturing process. In the HVAC industry, air compressors can be used to generate the pressurized air to drive the pneumatic actuators for dampers and valves in air-handling units. The compressed air is stored in a pressurized tank, which serves as an air source to the end users. Traditionally, the pressure of tank is maintained by the on–off control of one or multiple air compressors. Figure 11 shows a schematic diagram of an air compressor system with a VFD installed on each compressor.

Typically, staging control is used to maintain the compressed air pressure. When the end users require less compressed air and the compressed air pressure is higher than the set point, the compressor will shut off. On the contrary, one more compressor starts when the end user utilizes more compressed air and the compressed air pressure drops down below the set point. This inefficient control causes frequent compressor start–stops, which definitely shortens the lifetime of the compressor. However, if a VFD is installed, the wear and tear on the compressors is less so that their lifetime is prolonged. In addition, the compressor power is reduced.

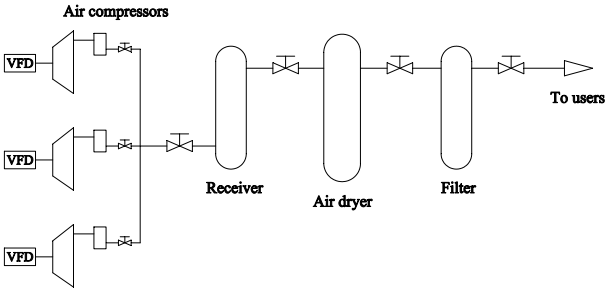

Figure 11. Air compressor system

3.4. Refrigeration systems

Refrigeration systems are also good candidates for VFD applications. The compressor is the major device where the VFD is installed in a refrigeration loop. The typical applications include RTUs, HPs, CRAC units, and chillers.

3.4.1. Rooftop units

Rooftop unit is one type of unitary air handler designed for outdoor use, usually on the roof. There are two types of configurations: packaged unit and split unit. A typical packaged rooftop unit has a refrigeration system delivering cool air into the space. Therefore, it is also called the direct-expansion (DX) unit. Meanwhile, most RTUs provide heating to the space using either a gas heater or an electric heater.

In an RTU, the supply fan (or indoor fan) and compressors are usually running at a constant speed. At partial load conditions, excessive fan and compressor power are consumed due to constant speed operations. With the installation of VFDs on the fan and (or) compressors, significant power consumption could be saved. In addition, compressors account for the largest part of power consumption in an RTU. With the reduction of compressor speed, both the demand and energy consumption are reduced greatly.

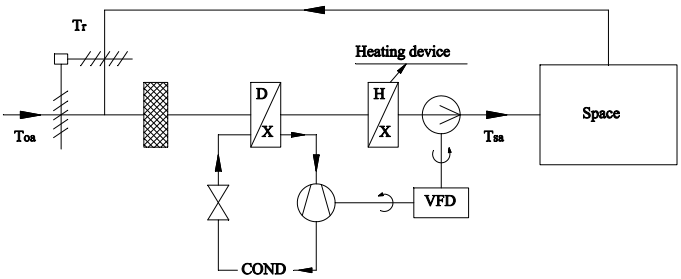

Figure 12. Single-stage DX rooftop unit

http://dx.doi.org/10.5772/61782

Figure 12 is a typical single-stage RTU. The supply fan circulates air through the evaporator and heater. Traditionally, the supply fan and compressor run at a constant speed. Initially, the VFD is used on the supply fan to modulate the fan speed and maintain the space temperature set point. This type of RTU can be called variable capacity RTU. Later, the VFD is used on the compressor as well. Both fan and compressor speeds can be modulated to control the space temperature.

3.4.2. Heat pump units

Heat pump units are very similar to RTUs as both systems utilize a refrigeration system. However, heat pump units can use the refrigeration system to produce heat as the first stage. At colder weather conditions, auxiliary heat is turned on to provide additional heating capacity.

A VFD can be installed on heat pump units as well. The schematic diagram is very similar to the RTU as shown in Figure 12.

3.4.3. Computer room air-conditioning units

A CRAC unit is one type of air-handling unit used for computer rooms or data centers. CRAC units are often located inside the data center and provide cooling to the servers. A typical CRAC unit includes direct expansion coil(s), compressors, supply fan(s), heater(s), and humidifier(s).

The traditional CRAC runs fans and compressors at a constant speed, which consumes extra fan and compressor power at partial load conditions. Application of a VFD converts a CRAC unit to a variable capacity CRAC unit. The VFD can be installed on the supply fan only or both the supply fan and compressors. The supply fan and compressor speeds are modulated to maintain the space temperature set point.

A data center is often a cooling-dominated building type. With the reduction of fan and compressor speeds, a great amount of fan and compressor power is saved.

3.4.4. Chillers

There are several ways to regulate system cooling capacity. (1) On–off control: This is the simplest way to control the capacity, but can cause frequent short cycling of compressors, which is detrimental to compressor performance. (2) Unloading control: This is often used for reciprocating compressors with multiple cylinders. (3) Slide valve control: This is often used for a screw compressor, which can adjust the compressor capacity with a wide range. (4) Hot gas bypass: This is not an efficient way as a mixture of hot and cold refrigerant is used. (5) Digital compressor: This is developed by Emerson for scroll compressors. The cooling capacity can be varied from 10% to 100%. (6) Variable speed compressor: This provides a smooth system capacity modulation with a wide range and is more energy efficient. Some chiller manufacturers already produced chillers with variable speed scroll compressors or variable speed screw compressors.

For a VFD-equipped compressor, the compressor speed is often modulated to maintain the supply water or supply air temperature set point.

4. VFD application on fault detection and diagnosis

Many researchers have studied fault detection and diagnosis (FDD) on HVAC systems. FDD technique is an effective way to improve the reliability of HVAC systems, and reduce the maintenance costs. There are a variety of methods and strategies on the equipment-level and system-level FDD, including AHUs, RTUs, etc. [19–21]. Almost all of the methods rely on the system operations measurements, such as temperature, humidity, pressure, airflow, and water flow.

Although VFDs are widely used in fans, pumps, and compressors in HVAC systems, most of these applications are focused on how to use the VFD to control motor speed. However, the VFD can measure several useful electrical-related parameters, which could be used for system monitoring and FDD purposes.

A typical VFD can measure and provide the output of speed/frequency, current, power, torque, and many other parameters. These electrical signals have inherent relationships with the system operating performances. For example, Li et al. [10] developed several fault signatures for a single-stage DX rooftop unit using fan power, compressor power, and supply air temperature measurements through an experimental study. With these known parameters, the components and system faults can be identified in advance. These signals can be sent out to an external controller or a BAS system through analog output signals or digital communication signals (Modbus, N2, FLN, BACNet, etc.).

Figures 13 and 14 present two configurations of connection between VFDs and the unit controller/BAS. In Figure 13, the VFD controls the speeds of multiple motors, such as fan motor, pump motors, or compressors. The controller monitors the operation of motors and receives motor operating information (such as speed, current, power, and torque) through digital communication. The controllers utilize this information and other system measurement readings (such as temperature) to perform FDD analysis.

It is also very common that each VFD controls only one motor, as shown in Figure 14. The controller communicates with each VFD and performs FDD analysis based on the operations of all motors.

One example is the application of the VFD on FDD in packaged RTUs. The common faults of an RTU include fouling evaporator coil, filter blockage, fouling condenser coil, refrigerant leakage, and improper charge. The common methods to detect these faults are using the measurement of multiple temperature and pressure points and comparing the actual readings to normal state readings. As a matter of fact, electrical signals can reflect the change of system performances. Recent research shows that the electrical signals, such as a VFD speed (frequency) and power, combined with other temperature parameters, can be used to detect these common faults based on experimental studies [10].

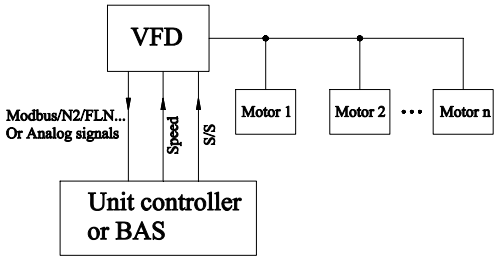

Figure 13. Configuration A showing the connection between the VFD and controller

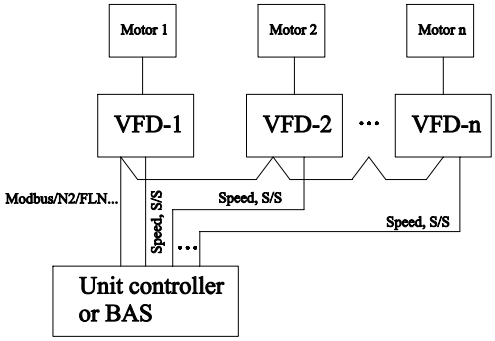

Figure 14. Configuration B showing the connection between the VFD and controller

To obtain the frequency (speed) and kilowatt for both the fan and compressor, both of them should be equipped with VFD, using a VFD to control both speeds or using dedicated VFD for fan and compressor. To monitor the performance of RTU, an outdoor air temperature (OAT) sensor and a supply air temperature (SAT) sensor are installed in the unit in addition to the VFD. The VFD speed and power are provided by the VFD itself and sent to an external controller or BAS through Modbus communication. The measured system parameters, such as VFD speed, VFD power, OAT, and SAT, are used to perform FDD on the existing RTU.

5. Application considerations

5.1. Minimum VFD speed

For all VFD applications, the maximum speed or frequency is relatively easy to set. In the United States, the maximum speed is usually 60 Hz. In some cases, a higher speed is used, which is not typical and recommended [22]. In contrast, the minimum speed setup needs more considerations because it has a potential impact on the building energy use and motor performance.

First, the motor itself has some limitations. VFD manufacturers often recommend a minimum speed of 30% of their rated speed (18 Hz) to prevent motor overheating due to inadequate airflow [23]. An inverter duty motor can have lower minimum setting as 20% (12 Hz). However, more considerations are needed to ensure effective operations.

For fans and pumps, the minimum speed can be as low as 6 Hz without creating motor overheat issue and other mechanical drawbacks [18]. Meanwhile, the operation factors should be considered as well, such as the indoor air quality (IAQ) requirements and air distribution requirements. If the fan speed is too low, with the same outdoor air damper position, less fresh air is delivered to the space. Therefore, a proper engineering calculation is needed. In addition, the operating mode places limitations on the minimum speed. For a single-zone unit running in cooling mode, a low speed could cause very low velocity at the outlet of ductwork, which may result in the cold air being dumped directly into space without a good mixture. In the heating mode, a speed that is too low may cause the hot air to stagnate on the upper level of space due to the buoyancy effect. Therefore, the actual minimum fan speed may be 20 Hz or so. In chilled water pump applications, the primary pump speed should be high enough to provide sufficient chilled water through chillers. Otherwise, the low-water-flow alarm could trip the operation of the chillers.

For compressors, their minimum speeds should be determined based on the oil return, as well as structural and safety requirements. For example, the manufacturer recommended a minimum VFD speed of 25 Hz for Discus compressors and 45 Hz for scroll compressors [24]. Most compressors have a vibration resonance issue at certain speeds. This can be solved by programming the VFD to skip this range, or by simply setting up a higher minimum speed to bypass this range.

5.2. Interferences

Most VFDs use pulse-width modulation to control the motor speed. PWM can create a large and rapid voltage swing, or an electromagnetic interference (EMI) because of the fast rise and fall times of the signals used by the PWM control circuits. The interference has adverse effects on the operation of the control system and motor components.

There are several recommendations to minimize interference from VFDs [25].

- Minimize the cable lengths between the VFD and motor. The longer the cable, the greater the potential for reflected voltage. The users shall follow the manufacturer's requirements for power cable installation. Generally, the cable length should be no more than 200 ft.
- Use the lowest VFD carrier frequency as it affects the maximum permitted cable length. The lower the frequency, the greater the maximum possible length of cable between the VFD and motors.
- Use an armored power cable. Metallic outer armor is recommended for the power cable to shield the system components from the high-frequency electric fields. Copper or aluminum should be used because steel does not provide effective shielding at high frequencies.

- Use separate metal conduits for input power, output power, control wires, and communication wires [26].
- Use isolation transformers for the VFD power. In this way, separate dedicated transformers and groundings are used for the VFD and control system. This grounding system could create a path to eliminate unwanted signals.
- Use other noise suppression components, such as input power filters, output power filters, and common mode chokes. These components can help suppress electrical noise in VFD applications.
- Select control-matched inverter-rated motors. These motors are designed to withstand the added stress when controlled by VFDs.

6. Summary

The VFD is an excellent electric device to control motor speed within the allowable operating range. The VFD applications on HVAC systems are presented in detail from the control perspective. Then, the application on FDD is introduced from the metering point of view. Lastly, the existing issues are summarized and recommendations are provided. Overall, VFDs play a great role in the optimal operation of building energy systems. The increased functionality and reliability along with the reduced cost make them more and more widely accepted and used in the HVAC industry. These applications will achieve a tremendous energy savings from motors.

Author details

Yunhua Li*

Address all correspondence to: yunhuali19@gmail.com

Bes-Tech Inc., Omaha, NE, USA

References

[1] Waide P, Brunner C.U.Energy-efficiency policy opportunities for electric motor-driven systems. OECD/IEA, International Energy Agency, Paris, France; 2011.

[2] Goetzler W, Sutherland T, Reis C. Energy savings potential and opportunities for high-efficiency electric motors in residential and commercial equipment. U.S. Department of Energy report [Internet]. 2013 Available from: http://energy.gov/sites/prod/

files/2014/02/f8/Motor%20Energy%20Savings%20Potential%20Report %202013-12-4.pdf [Access 2015-8-27]

[3] American Society of Heating, Refrigerating and Air-Conditioning Engineers. ASHRAE handbook: HVAC systems and equipment. Atlanta, GA: American Society of Heating, Refrigeration and Air-Conditioning Engineers.2008.

[4] Montgomery R, Mcdowall R.Fundamentals of HVAC control systems. Atlanta, GA: American Society of Heating, Refrigeration and Air-Conditioning Engineers; 2008.

[5] Itami T, Okoma K, Misawa K.. An experimental study of frequency-controlled compressor. In: International Compressor Engineering Conference at Purdue, Purdue University; 1982. p. 297–304.

[6] Qureshi T.Q., Tassou S.A. Variable-speed capacity control in refrigeration systems.. Applied Thermal Engineering. 1996;16(2):103–113.

[7] Cuevas C, Lebrun L. Testing and modelling of a variable speed scroll compressor. Applied Thermal Engineering. 2009;29(2–3):469–478.

[8] Ekren O, Sahin S, and Isler Y. Comparison of different controllers for variable speed compressor and electronic expansion valve. International Journal of Refrigeration. 2010;33 (6):1161–1168.

[9] Dardenne L, Fraccari E, Maggioni A, Molinaroli L, Proserpio L, Winandy E. Semi-empirical modelling of a variable speed scroll compressor with vapour injection.. Internatioal Journal of Refrigeration.. 2015;5(4):76–87.

[10] Li Y, Liu M, Lau J, Zhang B. Experimental study on electronic signatures of common faults for packaged DX rooftop units. Energy and Buildings. 2014;77:401–415.

[11] Li Y, Liu M, Lau J, Zhang B. Development of a variable speed compressor power model for single-stage packaged DX rooftop units. Applied Thermal Engineering. 2015;7(8):110–117.

[12] ANSI/ASHRAE/IESNA Standard 90.1-2010: energy standard for buildings except low-rise residential buildings. Atlanta, GA: American Society of Heating, Refrigeration and Air-Conditioning Engineers; 2010.

[13] Li Y, Liu M, Zhang B.VFD application in a manufacturing plant. Energy Engineering. 2013;110(2):58–77.

[14] Liu M, Claridge D.E., and Turner W.D. Continuous commissioning SM guidebook. Washington, DC: US Department of Energy; 2002.

[15] Liu M, Claridge D.E. The maximum potential energy savings from optimizing cold deck and hot deck reset schedules for dual duct VAV systems. Journal of Solar Energy Engineering. 1999;121(3):171–175.

[16] Hyman B.L., Bockmiller F. Primary chilled water loop retrofit. ASHRAE Journal. 2000;42(12):60–64.

[17] Liu M.. Variable water flow pumping for central chilled water systems. Journal of Solar Energy Engineering. 2002;124(3):300–304.

[18] Taylor S.T. Chilled water plant retrofit – a case study. ASHRAE Transactions. 2006;187–197.

[19] Seem J.E., House J.M. Integrated control and fault detection of air handling units. HVAC&R Research. 2009;15(1):25–55.

[20] Schein J, Bushby S.T. A hierarchical rule-based fault detection and diagnosis method for HVAC systems. HVAC&R Research. 2006;12(1):111–125.

[21] Li H, Braun J.E. A methodology for diagnosing multiple simultaneous faults in vapor compression air conditioners. HVAC&R Research. 2007;13(2):369–395.

[22] FLYGT. VFD recommendations [Internet]. 2015. Available from: http://www.flygtus.com/782832.pdf [Accessed: 2015-8-1]

[23] Tredinnick S. Variable speed pumping: how low can you go? [Internet]. 2006. Available from: http://www.districtenergy.org/pdfs/DEMagArticles/3Q06/3q06insideinsights.pdf [Accessed: 2015-8-1]

[24] Emerson Climate Technologies. Use of variable frequency drives (VFDs) with Copeland Scroll and Discuss compressors [Internet]. 2011. Available from: https://opi.emersonclimate.com/CPID/GRAPHICS/Types/AEB/ae1369.pdf [Accessed: 2015-8-1]

[25] Brown D, Harrold D, Hope R. Control system power and grounding better practice. London: Newnes; 2004.

[26] Frank J.B.Electromagnetic interference: what drive users need to know [Internet]. 2009. Available from: http://www.controleng.com/single-article/electromagnetic-interference-what-drive-users-need-to-know/f9c4ae94ed0d2381cf95ed2b914a6fd8.html [Accessed: 2015-7-10]