Chapter 13

Power Electronics in Small Scale Wind Turbine Systems

Mostafa Abarzadeh, Hossein Madadi Kojabadi and Liuchen Chang

Additional information is available at the end of the chapter

http://dx.doi.org/10.5772/51918

1. Introduction

Although fossil fuel is the main energy supplier of the worldwide economy, due to its adverse effects on environment, the scientists look for alternative resources in power generation. Electricity generation using renewable energy has been well recognized as environmentally friendly, socially beneficial, and economically competitive for many applications. Wind turbines, photovoltaic systems, full cells and PATs are main resources for distributed generation systems [1]. Compared with other renewable energy, wind power is more suitable for some applications with relatively low cost [2,3]. Wind turbine system (WTS) technology is still the most suitable renewable energy technology. While most large companies are focusing on large wind turbines of the utility scale, small wind turbines as distributed power generators have attracted a growing interest from the general public, small farms and remote communities [4]. In recent years, the level of interest in small-scale wind turbine generators has been increasing due to growing concerns over the impact of fossil-fuel based electricity generation [5]. According to the American Wind Energy Association (AWEA) annual wind industry report, the U.S. market for small wind turbines (<100kW) grew 78% in 2008 adding 17.3 MW of installed capacity. Over 10,000 small wind turbines were sold in the U.S. in 2008 [6]. UK based consultants Gerrad Hassan also predicts that small wind turbine sales have the potential to increase to well over US$750 million by 2005 [4]. Small-scale wind turbines are particularly advantageous for power generation at a household level [5]. A small-scale wind turbine consists of a generator, a power electronic converter, and a control system. Among different types of small-size wind turbine, permanent magnet (PM) generator is widely used because of its high reliability and simple structure [1,2]. The power electronic converter topology used depends on the required output power and cost of the system. Control systems are used to control the rotational speed of

small-scale wind turbines enabling them to operate with optimum speed to extract maximum power from wind [1,2,4].

For rural and remote areas, the small-scale stand-alone wind power system with a battery bank as the energy storage component is common and essential for providing stable and reliable electricity [2,7-10]. For the stand-alone wind power system, the load is a battery that can be considered as an energy sink with almost constant voltage. The battery can absorb any level of power as long as the charging current does not exceed its limitation. Since the voltage remains almost constant, but the current flows through it can be varied, the battery can be also considered as a load with a various resistance [2,11,12].

There is increasing market for a grid connected small wind generating system (without battery storage) for home owners and small businesses in rural areas. In this case the excess energy form the wind generator is fed to the utility grid. The AC grid can also be a diesel grid or a battery/diesel mini hybrid grid. A grid connected inverter structure which extracts energy even at low wind speeds will assist in reducing capital cost and offer opportunities for interfacing small-scale wind generators with the AC grid. Conventional grid connected wind turbines use a charge controller to charge the batteries and a grid connected inverter to process power from the battery to the utility grid [4].

This chapter presents a power electronic energy conversion system for small-scale stand-alone wind power system with a battery bank as the energy storage component and grid connected power electronic interface for interfacing variable speed small-scale wind generators to a grid. Small-scale wind turbine consist of permanent magnet synchronous generator (PMSG), AC/DC converter, DC/DC converter as the maximum power point tracking controller, inverter and load.

2. Small-scale wind turbine system

A small wind turbine generally consists of the following components: A rotor with a variable number of blades for convert the power from wind to mechanical power, an electric generator, control and protection mechanisms, and power electronic components for feeding electricity into a battery bank, the public grid or, occasionally, into a direct application such as a water-pump[1,13].

The generator is the main part of a small wind turbine. The generator converts the mechanical power into electrical power. The two common types of electrical machines used in small scale wind turbines are self excited induction generators (SEIG) and permanent magnet synchronous generators (PMSG). In these cases, the common way to convert the low-speed mechanical power to electrical power is a utilizing a gearbox and a SEIG with standard speed. The gearbox adapts the low speed of the turbine rotor to the high speed of generators, though the gearbox may not be necessary for multiple-pole generator systems. In the self-excited induction generators, the reactive power necessary to energize the magnetic circuits must be supplied from parallel capacitors bank at the machine terminal. In this case, the ter-

minal voltage or reactive power may not be directly controlled, and the induction generators may suffer from voltage instability problem. There is considerable interest in the application of the multiple-pole Permanent Magnet Synchronous Generators (PMSG) driven by a wind-turbine shaft without gearbox [1]. As described above, the electric generators of modern small wind turbines are generally designed to use permanent magnets and a direct coupling between rotor and generator. The following common topologies can be encountered:

1. Axial flow air-cored generators
2. Axial flow generators with toroidal iron cores
3. Axial flow generators with iron cores and slots
4. Radial flow generators with iron cores and slots
5. Transverse flow generators with slotted iron core

In the topologies above the type of flow refers to the direction of the magnetic flow lines crossing the magnetic gap between the poles with respect to the rotating shaft of the generator [13].

It is important to be able to control and limit the converted mechanical power during higher wind speeds. The power limitation during higher wind speeds in small scale wind turbines may be done by furling control or soft-stall control [1,14]. Furling is a passive mechanism used to limit the rotational frequency and the output power of small-scale wind turbine in strong winds. While other mechanisms, such as passive blade pitching or all-electronic control based on load-induced stall can occasionally be encountered, furling is the most frequently used mechanism [13]. Many small wind turbines use an upwind rotor configuration with a tail vane for passive yaw control. Typically, the tail vane is hinged, allowing the rotor to furl (turn) in high winds, providing both power regulation and over-speed protection. At higher wind speeds, the generated power of the wind turbine can go above the limit of the generator or the wind turbine design. When this occurs, small wind turbines use mechanical control or furling to turn the rotor out of the wind resulting in shedding the aerodynamic power or a steep drop in the power curve [1,13-16]. The basic operating principle of furling system is shown in Figure 1.

Often, small turbine rotors furl abruptly at a wind speed only slightly above their rated wind speed, resulting in a very "peaky" power curve and poor energy capture at higher wind speeds. This energy loss is compounded by the furling hysteresis, in which the wind speed must drop considerably below the rated wind speed before the rotor will unfurl and resume efficient operation. One way to improve the performance of furling wind turbines is to design the rotor to furl progressively, causing the power output to remain at or near rated power as the wind speed increases beyond it's rated value. This approach has two drawbacks: wind turbine rotors operating at high furl angles tend to be very noisy and experience high flap loads. Note that manufactured wind turbines use a damper to reduce the furling loop hysteresis. Damping is necessary to keep the wind turbine from cycling or chattering in and out of furling. The damping plus the gyroscopic effect of turning wind turbine

blades add to the unproductive time of entering and leaving the furling condition creating a hysteresis during transition. All of these delays reduce the wind turbine energy production [1,14-16].

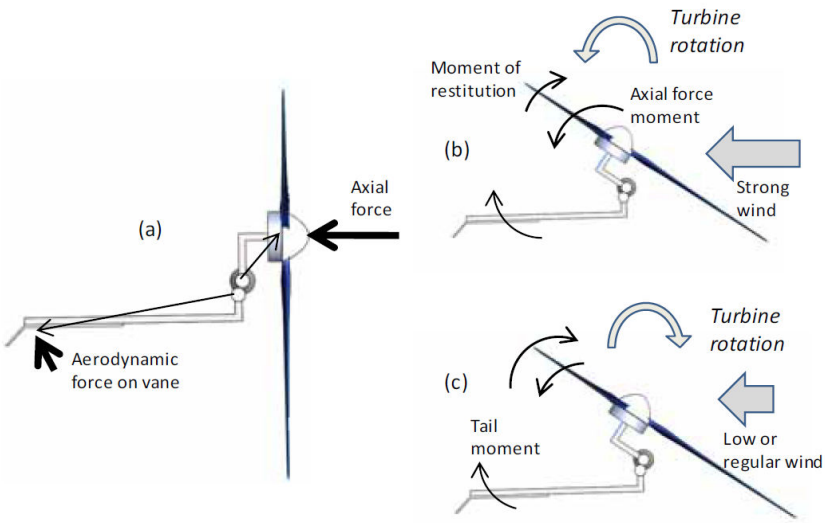

Figure 1. Overview of the operating principles of a furling system. (a) Aerodynamic forces. (b) Furling movement in strong winds. (c) Restitution of normal (aligned) operation upon reduction of the wind speed [13].

The soft-stall concept is to control the generator rotations per minute (rpm) and achieve optimum operation over a wide range of rotor rpm. In order to control the generator rpm, the soft-stall concept regulates the stall mode of the wind turbine, thus furling can be delayed in normal operation. Furling is still used in the soft-stall concept during very high winds and emergency conditions. Potential advantages of soft-stall control are listed as follows:

- Delays furling as long as possible, which increases energy production
- Controls the wind turbine rotational speed to achieve the maximum power coefficient
- Operates the wind turbine at a low tip-speed ratio during high wind speeds to reduce noise and thrust loads [1,14-16].

The only difference between furling and soft-stall control is the addition of the DC-DC converter that allows the power to be controlled. With the DC-DC Converter between the rectifier and load, the transmitted power to the load can be controlled according to prescribed power/rpm schedule.

A variable speed wind turbine configuration with power electronics conversion corresponds to the full variable speed controlled wind turbine, with the generator connected to the load or to the grid through a power converter as shown in Figure 2.

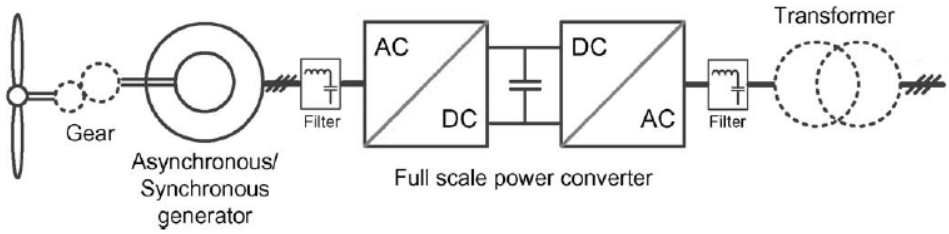

Figure 2. AC/DC/AC power electronic interface for a wind generator.

The grid-connected inverters will inject the active power to the grid with minimum total harmonic distortion (THD) of output current and voltage. The grid voltage and inverter output voltage will be synchronized by zero-crossing circuit. The generator can be self-excited asynchronous generator (SEIG), or permanent magnet synchronous generator (PMSG). The stator windings are connected to the load or to the grid through a full-scale power converter. Some variable speed WTSs are gearless. In these cases, a direct driven multi-pole generator is used.

3. Power electronic converters for wind turbine system

A permanent magnet generator has no excitation control and output voltage is proportional to the rotor speed. Therefore, in control of wind turbine, the rotor speed is obtained via the output voltage measurement. The earliest and still most widely used power electronic circuit for this application uses an AC/DC/AC technology in which the variable frequency, variable voltage from the generator is first rectified to DC and then converted to AC and fed to the grid or load. The continuous variation of wind speed will result in a DC link voltage varying in an uncontrolled manner. In order to get variable speed operation and stable dc bus voltage, a boost dc-dc converter could be inserted in the dc link [17]. As there is active power flows unidirectionally from the PMSG to the dc link through a power converter, only a simple diode rectifier can be applied to the generator side converter in order to obtain a cost-efficient solution [4,5].

3.1. AC/DC/AC converters for power electronic interface

3.1.1. Three-Phase bridge rectifier

A three-phase bridge rectifier is commonly used in wind power applications. This is a full-wave rectifier and gives six-pulse ripples on the output voltage. Each one of six diodes conducts for 120º. The pair of diodes which are connected between that pair of supply lines having the highest amount of instantaneous line-to-line voltage will conduct [18]. The three-phase bridge rectifier is shown in Figure 3.

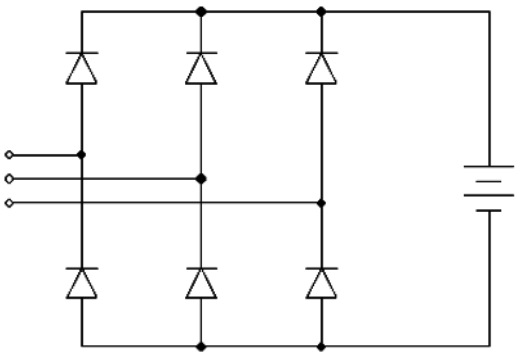

Figure 3. Three-phase bridge rectifier.

If V_m is the peak value of the phase voltage, then the average and rms output voltage is calculate with

$$V_{dc} = \frac{2}{2\pi/6}\int_0^{\pi/6}\sqrt{3}\,V_m \cos\omega t\; d(\omega t) = \frac{3\sqrt{3}}{\pi}V_m = 1.654V_m \tag{1}$$

$$V_{rms} = \left[\frac{2}{2\pi/6}\int_0^{\pi/6} 3\,V_m{}^2\cos^2\omega t\; d(\omega t)\right]^{1/2} = \left(\frac{3}{2} + \frac{9\sqrt{3}}{4\pi}\right)^{1/2} V_m = 1.6554V_m \tag{2}$$

3.1.2. DC/DC converters

Dc converters can be used as switching-mode regulators to convert to dc voltage, normally unregulated, to a regulated dc output voltage. The regulation is normally achieved by PWM at a fixed frequency and the switching device is normally IGBT or MOSFET. The following range of DC-to-DC converters, in which the input and output share a common return line, are often referred to as "three-terminal switching regulators" [19].

The switching regulators will often replace linear regulators when higher efficiencies are required. They are characterized by the use of a choke rather than a transformer between the input and output lines. The switching regulator differs from its linear counterpart in that switching rather than linear techniques are used for regulation, resulting in higher efficiencies and wider voltage ranges. Further, unlike the linear regulator, in which the output voltage must always be less than the supply. The switching regulator can provide outputs which are equal to, lower than, higher than, or of reversed polarity to the input. There are four basic topologies of switching regulators:

1. *Buck regulators:* In buck regulators, the output voltage will be of the same polarity but always lower than the input voltage. One supply line must be common to both input and output. This may be either the positive or negative line, depending on the regulator design.

2. *Boost regulators:* In boost regulator, the output voltage will be of the same polarity but always higher than the input voltage. One supply line must be common to both input and output. This may be either the positive or negative line, depending on the design. The boost regulator has a right-half-plane zero in the transfer function.

3. *Buck-boost regulators:* Because of a combination of the buck and boost regulators, this type is known as a "buck-boost" regulator. In this type, the output voltage is of opposite polarity to the input, but its value may be higher, equal, or lower than that of the input. One supply line must be common to both input and output, and either polarity is possible by design. The inverting regulator carries the right-half-plane zero of the boost regulator through to its transfer function.

4. *Cuk regulators:* This is a relatively new class of boost-buck-derived regulators, in which the output voltage will be reversed but may be equal, higher, or lower than the input. Again one supply line must be common to both input and output, and either polarity may be provided by design. This regulator, being derived from a combination of the boost and buck regulators, also carries the right-half-plane zero through to its transfer function [18-20].

3.1.2.1. Buck regulators

The step-down dc-dc converter, commonly known as a buck converter, is shown in Figure 4. Its operation can be seen as similar to a mechanical flywheel and a one piston engine. The L-C filter, like the flywheel, stores energy between the power pulses of the driver. The input to the L-C filter (choke input filter) is the chopped input voltage. The L-C filter volt-time averages this duty-cycle modulated input voltage waveform. The L-C filtering function can be approximated by

$$V_{out} = V_{in} \times Duty\ cycle \tag{3}$$

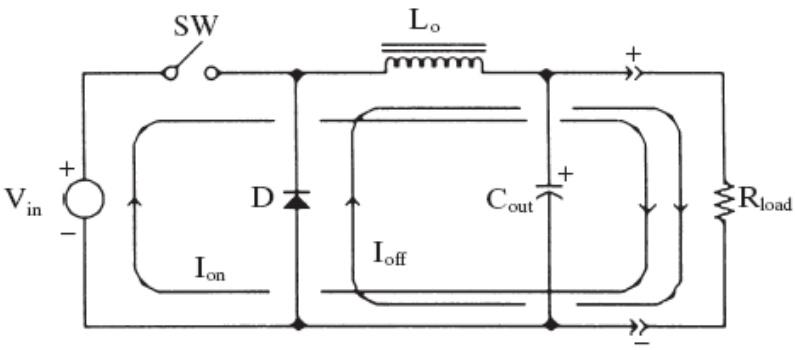

Figure 4. Basic circuit of a buck switching regulator

The output voltage is maintained by the controller by varying the duty cycle. The buck converter is also known as a step-down converter, since its output must be less than the input voltage [19,20].

The state of the converter in which the inductor current is never zero for any period of time is called the continuous conduction mode (CCM). It can be seen from the circuit that when the switch SW is commanded to the on state, the diode D is reverse-biased. When the switch SW is off, the diode conducts to support an uninterrupted current in the inductor [20].

Typical waveforms in the converter are shown in Figure 5 under the assumption that the inductor current is always positive.

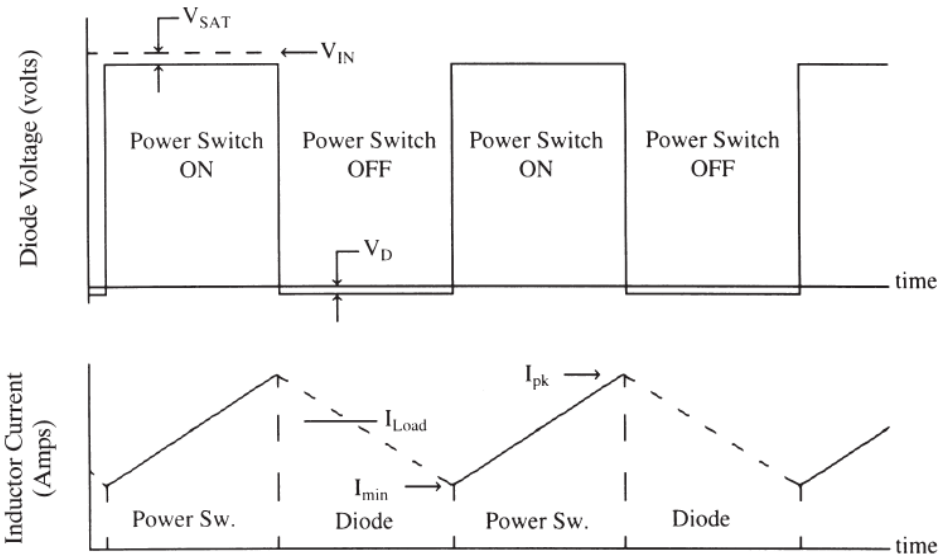

Figure 5. The voltage and current waveforms for a buck converter

The operation of the buck regulator can be seen by breaking its operation into two periods (refer to Figure 5). When the switch is turned on, the input voltage is presented to the input of the L-C filter. The inductor current ramps linearly upward and is described as

$$i_L\ (on) = \frac{(V_{in} - V_{out})t_{on}}{L_O} + i_{init} \tag{4}$$

The energy stored within the inductor during this period is

$$E_{stored} = \frac{1}{2} L_O (i_{peak} - i_{min})^2 \tag{5}$$

When SW turns off, the inductor will try to maintain the forward current constant, and the input voltage to the inductor wants to fly below ground and the diode. The current in inductor will now continue to circulate in the same direction as before with diode and the load. However, since the voltage now impressed across inductor has reversed, the current in inductor will now decrease linearly to its original value during the "off" period. The current through the inductor is described during this period by

$$i_L\ (off) = i_{peak} - \frac{V_{out} \cdot t_{off}}{L_O} \tag{6}$$

The current waveform, this time, is a negative linear ramp whose slope is $-V_{out}/L$. The dc output load current value falls between the peak and the minimum current values. In typical applications, the peak inductor current is about 150 percent of the dc load current and the minimum current is about 50 percent [20].

Condition for continuous inductor current and capacitor voltage: The voltage across the inductor L is, in general

$$e_L = L\ \frac{di}{dt} \tag{7}$$

Assuming that the inductor current rises linearly from I_{min} to I_{pk} in time t_{on}.

$$t_{on} = \frac{\Delta I\ L}{V_{in} - V_{out}} \tag{8}$$

And the inductor currents falls linearly from I_{pk} to I_{min} in time t_{off} .

$$t_{off} = \frac{\Delta I\ L}{V_{out}} \tag{9}$$

The switching period T can be expressed as

$$T = t_{on} + t_{off} = \frac{\Delta I\ L}{V_{in} - V_{out}} + \frac{\Delta I\ L}{V_{out}} = \frac{\Delta I\ L\ \ V_{in}}{V_{out}(V_{in} - V_{out})} \tag{10}$$

Which gives the peak-to-peak ripple current as

$$\Delta I = \frac{V_{out}(V_{in} - V_{out})}{fL\ V_{in}} = \frac{V_{in} k(1 - k)}{fL} \tag{11}$$

If I_L is the average inductor current, the inductor ripple current $\Delta I = 2I_L$. Using equations (3) and (11), we get

$$\frac{V_{in}k(1-k)}{fL}=2I_L=2I_a=\frac{2k\,V_{in}}{R} \tag{12}$$

Which gives the critical value of the inductor L_c as

$$L_c=\frac{(1-k)R}{2f} \tag{13}$$

The capacitor voltage is expressed as

$$v_c=\frac{1}{C}\int i_c dt+v_c\left(t=0\right) \tag{14}$$

If we assume that the load ripple current Δi_o is very small, $\Delta i_L=\Delta i_c$. The average capacitor current, which flows into $\frac{t_{on}}{2}+\frac{t_{off}}{2}=\frac{T}{2}$, is

$$I_c=\frac{\Delta I}{4} \tag{15}$$

From (14) and (15) the peak-to-peak ripple voltage of the capacitor is

$$\Delta V_c=v_c-v_c(t=0)=\frac{1}{C}\int_0^{T/2}\frac{\Delta I}{4}dt=\frac{\Delta I\,T}{8C}=\frac{\Delta I}{8fC} \tag{16}$$

From (11) and (16), we get

$$\Delta V_c=\frac{V_{out}(V_{in}-V_{out})}{8LCf^2V_{in}}=\frac{V_{in}k(1-k)}{8LCf^2} \tag{17}$$

If V_c is the average capacitor voltage, the capacitor ripple voltage $\Delta V_c=2V_{out}$. Using equations (3) and (17), we get

$$\frac{V_{in}k(1-k)}{8LCf^2}=2V_{out}=2kV_{in} \tag{18}$$

Which gives the critical value of the capacitor C_c as

$$C_c=C=\frac{1-k}{16L\,f^2} \tag{19}$$

The advantages of forward-mode converters are: they exhibit lower output peak-to-peak ripple voltages than do boost-mode converters, and they can provide much higher levels of output power. Forward-mode converters can provide up to kilowatts of power [18-20].

3.1.2.2. Boost regulators

In a boost regulator the output voltage is greater than the input voltage. Figure 6 shows the general arrangement of the power sections of a boost regulator. As one can notice, the boost-mode converter has the same parts as the forward-mode converter, but they have been rearranged. This new arrangement causes the converter to operate in a completely different fashion than the forward-mode converter [19, 20]. When SW turns on, the supply voltage will be impressed across the series inductor L. Under steady-state conditions, the current in L will increase linearly in the forward direction. Rectifier D will be reverse-biased and not conducting. At the same time, current will be flowing from the output capacitor Cout into the load. Hence, Cout will be discharging. Figures 7 and 8 show the current waveforms. The inductor's current wave form is also a positive linear ramp and is described by

$$i_L\ (on) = \frac{V_{in} t_{on}}{L} \tag{20}$$

When SW turns off the current in L will continue to flow in the same direction, rectifier diode D will conduct, and the inductor current will be transferred to the output capacitor and load. Since the output voltage exceeds the supply voltage, L will now be reverse-biased, and the current in L will decay linearly back toward its original value during the "off" period of SW. The inductor current during the power switch off period is described by

$$i_L\ (off) = i_{peak}(on) - \frac{(V_{out} - V_{in}) t_{off}}{L} \tag{21}$$

As with the buck regulator, for steady-state conditions, the forward and reverse volt-seconds across L must equate. The output voltage V_{out} is controlled by the duty ratio of the power switch and the supply voltage, as follows

$$V_{in} \times t_{on} = (V_{out} - V_{in}) \times t_{off} \ \rightarrow\ V_{out} = V_{in} \times \left(\frac{t_{off} + t_{on}}{t_{off}}\right)^{\frac{t_{off}+t_{on}}{t_{off}} = \frac{1}{1-k}} \ \rightarrow\ V_{out} = \frac{1}{1-k} V_{in} \tag{22}$$

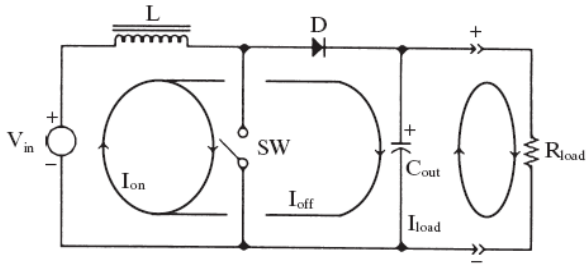

Figure 6. Basic circuit of a boost switching regulator

When the core's flux is completely emptied prior to the next cycle, it is referred to as the discontinuous-mode of operation. This is seen in the inductor current and voltage waveforms in Figure 7. When the core does not completely empty itself, a residual amount of energy remains in the core. This is called the continuous mode of operation and can be seen in Figure 8. The majority of boost-mode converters operate in the discontinuous mode since there are some intrinsic instability problems when operating in the continuous mode. The energy stored within the inductor of a discontinuous-mode boost converter is described by

$$E_{stored} = \frac{1}{2} L \; i_{pk}^{2} \tag{23}$$

The energy delivered per second (joules/second or watts) must be sufficient to meet the continuous power demands of the load. This means that the energy stored during the ON time of the power switch must have a high enough I_{pk} to satisfy equation (24):

$$P_{load} < P_{out} = f\left[\frac{1}{2} L \; I_{pk}^{2}\right] \tag{24}$$

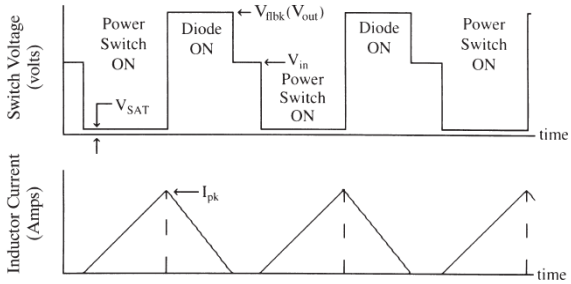

Figure 7. Waveforms for a discontinuous-mode boost converter.

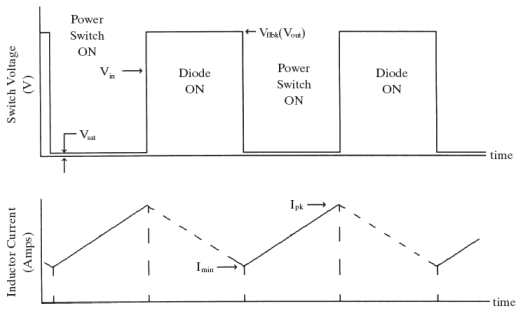

Figure 8. Waveforms for a continuous-mode boost converter.

Condition for continuous inductor current and capacitor voltage: Assuming that the inductor current rises linearly from I_{min} to I_{pk} in time t_{on}.

$$t_{on} = \frac{\Delta I\ L}{V_{in}} \tag{25}$$

And the inductor currents falls linearly from I_{pk} to I_{min} in time t_{off}.

$$t_{off} = \frac{\Delta I\ L}{V_{out} - V_{in}} \tag{26}$$

The switching period T can be expressed as

$$T = t_{on} + t_{off} = \frac{\Delta I\ L}{V_{in}} + \frac{\Delta I\ L}{V_{out} - V_{in}} = \frac{\Delta I\ L\ \ V_{out}}{V_{in}(V_{out} - V_{in})} \tag{27}$$

Which gives the peak-to-peak ripple current as

$$\Delta I = \frac{V_{in}(V_{out} - V_{in})}{fL\ \ V_{out}} = \frac{V_{in}k}{fL} \tag{28}$$

If I_L is the average inductor current, the inductor ripple current $\Delta I = 2I_L$. Using equations (22) and (28), we get

$$\frac{V_{in}k}{fL} = 2I_L = 2I_a = \frac{2\,V_{in}}{(1-k)R} \tag{29}$$

Which gives the critical value of the inductor L_c as

$$L_c = \frac{k(1-k)R}{2f} \tag{30}$$

When the SW is on, the capacitor supplies the load current for $t = t_{on}$. The average capacitor current during time t_{on} is $I_c = I_{out}$ and peak-to-peak voltage of the capacitor is

$$\Delta V_c = v_c - v_c(t=0) = \frac{1}{C}\int_0^{t_{on}} I_c dt = \frac{1}{C}\int_0^{t_{on}} I_{out} dt = \frac{I_{out} t_{on}}{C} \tag{31}$$

Substituting $t_{on} = (V_{out} - V_{in})/(V_{out} f)$ in (31) gives

$$\Delta V_c = \frac{I_{out}(V_{out} - V_{in})}{V_{out} fC} = \frac{I_{out} k}{fC} \tag{32}$$

If V_c is the average capacitor voltage, the capacitor ripple voltage $\Delta V_c = 2V_{out}$. Using equations (32), we get

$$\frac{I_{out}k}{fC} = 2V_{out} = 2I_{out}R \tag{33}$$

Which gives the critical value of the capacitor C_c as

$$C_c = C = \frac{k}{2fR} \tag{34}$$

To the boost regulator's advantage, the input current is now continuous (although there will be a ripple component depending on the value of the inductance L). Hence less input filtering is required, and the tendency for input filter instability is eliminated [18-20].

3.1.2.3. Buck-boost regulators

A buck-boost regulator provides an output voltage that may be less than or greater than the input voltage. The output voltage polarity is opposite to that of the input voltage. Figure 9 shows the power circuit of a typical buck-boost regulator which operates as discussed below [18-20]

When SW is on, current will build up linearly in inductor L. Diode D is reverse-biased and blocks under steady-state conditions. When SW turns off, the current in L will continue in the same direction, and diode D is brought into conduction, transferring the inductor current into the output capacitor C and load. During the off period, the voltage across L is reversed, and the current will decrease linearly toward its original value. The output voltage depends on the supply voltage and duty cycle (t_{on} / t_{off}), and this is adjusted to maintain the required output. The current waveforms are the same as those for the boost regulator shown in Figure 10. As previously, the forward and reverse volt-seconds on L must equate for steady-state conditions, and to meet this volt-seconds equality

$$V_{in} \times t_{on} = V_{out} \times t_{off} \rightarrow V_{out} = V_{in} \times \left(\frac{t_{on}}{t_{off}}\right) \rightarrow V_{out} = -\frac{k}{1-k} V_{in} \tag{35}$$

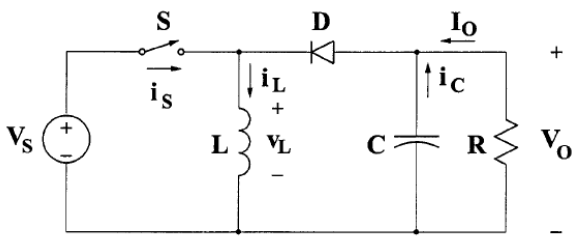

Figure 9. Basic circuit of a buck-boost switching regulator

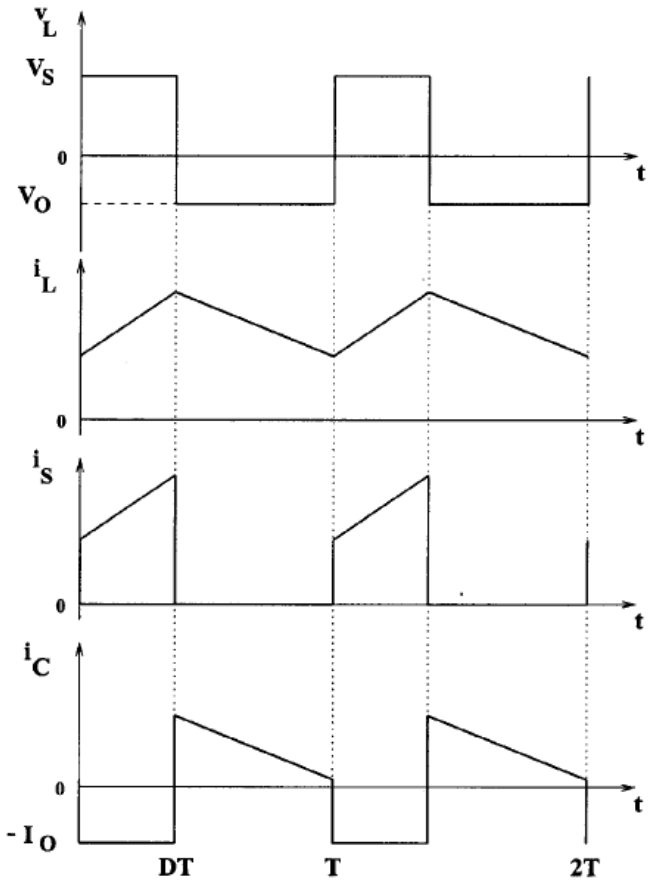

Figure 10. The voltage and current waveforms for a buck-boost converter

Condition for continuous inductor current and capacitor voltage: Assuming that the inductor current rises linearly from I_{min} to I_{pk} in time t_{on}.

$$t_{on} = \frac{\Delta I\ L}{V_{in}} \tag{36}$$

And the inductor currents falls linearly from I_{pk} to I_{min} in time t_{off}.

$$t_{off} = \frac{-\Delta I\ L}{V_{out}} \tag{37}$$

The switching period T can be expressed as

$$T = t_{on} + t_{off} = \frac{\Delta I\ L}{V_{in}} + \frac{-\Delta I\ L}{V_{out}} = \frac{\Delta I\ L\ (V_{out} - V_{in})}{V_{in} V_{out}} \tag{38}$$

Which gives the peak-to-peak ripple current as

$$\Delta I = \frac{V_{in} V_{out}}{fL\ (V_{out} - V_{in})} = \frac{V_{in} k}{fL} \tag{39}$$

If I_L is the average inductor current, the inductor ripple current $\Delta I = 2I_L$. Using equations (35) and (39), we get

$$\frac{V_{in} k}{fL} = 2I_L = 2I_a = \frac{2k\ V_{in}}{(1 - k)R} \tag{40}$$

Which gives the critical value of the inductor L_c as

$$L_c = \frac{(1 - k)R}{2f} \tag{41}$$

When the SW is on, the capacitor supplies the load current for $t = t_{on}$. The average capacitor current during time t_{on} is $I_c = I_{out}$ and peak-to-peak voltage of the capacitor is

$$\Delta V_c = v_c - v_c(t = 0) = \frac{1}{C}\int_0^{t_{on}} I_c dt = \frac{1}{C}\int_0^{t_{on}} I_{out} dt = \frac{I_{out} t_{on}}{C} \tag{42}$$

Substituting $t_{on} = V_{out} / [(V_{out} - V_{in}) f]$ in (42) gives

$$\Delta V_c = \frac{I_{out} V_{out}}{(V_{out} - V_{in}) fC} = \frac{I_{out} k}{fC} \tag{43}$$

If V_c is the average capacitor voltage, the capacitor ripple voltage $\Delta V_c = 2V_{out}$. Using equations (43), we get

$$\frac{I_{out} k}{fC} = 2V_{out} = 2I_{out} R \tag{44}$$

Which gives the critical value of the capacitor C_c as

$$C_c = C = \frac{k}{2fR} \tag{45}$$

Note that the output voltage is of reversed polarity but may be greater or less than V_{in}, depending on the duty cycle. In the inverting regulator, both input and output currents are discontinuous, and considerable filtering will be required on both input and output [18-21].

3.1.2.4. Cuk regulators

Similar to the buck-boost regulator, the cuk regulator provides an output voltage that is less than or greater than input voltage, but the output voltage polarity is opposite to that of the input voltage. Figure 11 shows the general arrangement of the power sections of a cuk regulator. The voltage and current waveforms for the cuk regulator are shown in Figure 12.

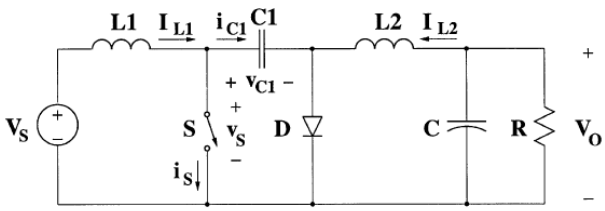

Figure 11. Basic circuit of a cuk switching regulator

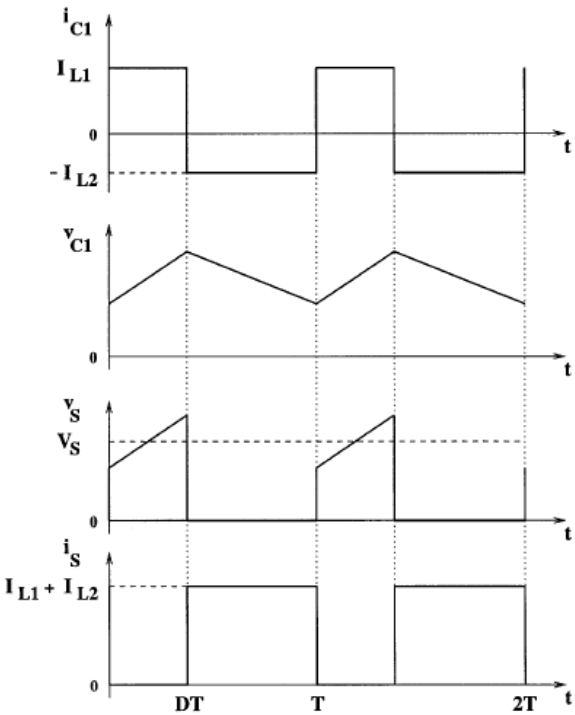

Figure 12. The voltage and current waveforms for a cuk converter

An important advantage of this topology is a continuous current at both the input and the output of the converter. Disadvantages of the cuk converter are a high number of reactive components and high current stresses on the switch, the diode, and the capacitor C1. When the switch is on, the diode is off and the capacitor C1 is discharged by the inductor L2 current. With the switch in the off state, the diode conducts currents of the inductors L1 and L2, whereas capacitor C1 is charged by the inductor L1 current [18-21].

To obtain the dc voltage transfer function of the converter, we shall use the principle that the average current through a capacitor is zero for steady-state operation. Let us assume that inductors L1 and L2 are large enough that their ripple current can be neglected. Capacitor C1 is in steady state if

$$I_{L\ 2}kT = I_{L\ 1}(1 - k)T \tag{46}$$

For a lossless converter

$$P_S = V_S I_{L\ 1} = -V_O I_{L\ 2} = P_O \tag{47}$$

From (46) and (47), the dc voltage transfer function of the cuk converter is

$$V_{out} = -\frac{k}{1 - k} V_{in} \tag{48}$$

The critical values of the inductor L_{c1} and L_{c2} determined by

$$L_{c1} = \frac{(1 - k)^2 R}{2kf} \tag{49}$$

$$L_{c2} = \frac{(1 - k)R}{2f} \tag{50}$$

And the critical values of the capacitor C_{c1} and C_{c2} determined by

$$C_{c1} = \frac{k}{2fR} \tag{51}$$

$$C_{c2} = \frac{1}{8fR} \tag{52}$$

3.1.3. Inverters

DC-to-ac converters are known as inverters. The function of inverter is to change a dc input voltage to symmetric ac output voltage of desired magnitude and frequency. The output voltage could be fixed or variable at a fixed or variable frequency. A variable output voltage can be obtained by varying the input dc voltage and maintaining the gain of inverter con-

stant. The output voltage waveforms of ideal inverters should be sinusoidal. However, the waveforms of practical inverters are non-sinusoidal and contain certain harmonics [18, 22].

For sinusoidal ac outputs, the magnitude, frequency, and phase should be controllable. Inverters generally use PWM control signals for producing an ac output voltage. According to the type of ac output waveform, these topologies can be considered as voltage source inverters (VSIs), where the independently controlled ac output is a voltage waveform. These structures are the most widely used in small-scale wind power applications. Similarly, these topologies can be found as current source inverters (CSIs), where the independently controlled ac output is a current waveform. These structures are not widely used in small-scale wind power applications [18].

Inverters can be broadly classified into two types: single-phase inverters, and three-phase inverters.

3.1.3.1. Single-phase bridge inverters

A single-phase bridge voltage source inverter (VSI) is shown in Figure 13. It consists of four switches. When S_1 and S_2 are turned on, the input voltage V_d appears across the load. If S_3 and S_4 are turned on, the voltage across the load is $-V_d$. Table 1 shows five switch states. If these switches are off at the same time, the switch state is 0. The rms output voltage can be found from

$$V_O = \sqrt{\left(\frac{2}{T_0}\int_0^{T_0/2} V_d^2 dt\right)} = V_d \tag{53}$$

Output voltage can be represented in Fourier series. The rms value of fundamental component as

$$v_O = \sum_{n=1,3,\ldots}^{\infty} \frac{4V_d}{n\pi}\sin n\omega t \xrightarrow{n=1} V_1 = \frac{4V_d}{\sqrt{2}\pi} = 0.90V_d \tag{54}$$

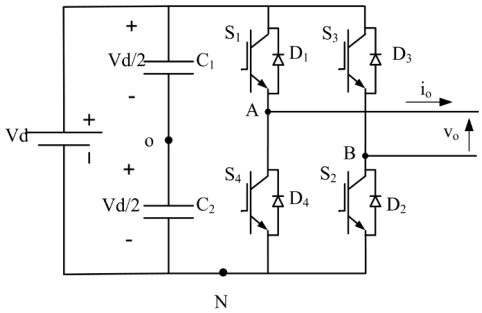

Figure 13. Single-phase full bridge inverter

When diodes D_1 and D_2 conduct, The energy is fed back to the dc source; so, they are known as feedback diodes. The instantaneous load current i_o for an RL load becomes

$$i_o = \sum_{n=1,3,\ldots}^{\infty} \frac{4V_d}{n\pi\sqrt{R^2 + (n\omega L)^2}} \sin\left(n\omega t - \theta_n\right) \tag{55}$$

Where $\theta_n = \tan^{-1}(n\omega L / R)$.

State No.	Output Voltage Level	State of (S_1, S_2, S_3, S_4)	Components Conducting
1	$+V_d$	(1, 1 , 0 , 0)	S_1 and S_2 if $i_o > 0$ D_1 and D_2 if $i_o < 0$
2	$-V_d$	(0, 0 , 1 , 1)	D_3 and D_4 if $i_o > 0$ S_3 and S_4 if $i_o < 0$
3	0	(1, 0 , 1 , 0)	S_1 and D_3 if $i_o > 0$ D_1 and S_3 if $i_o < 0$
4	0	(0, 1 , 0 , 1)	D_4 and S_2 if $i_o > 0$ S_4 and D_2 if $i_o < 0$
5	$-V_d$ $+V_d$	(0, 0 , 0 , 0)	D_4 and D_3 if $i_o > 0$ D_4 and D_2 if $i_o < 0$

Table 1. Switches states for a single-phase full-bridge inverter.

To control of the output voltage of inverters is often necessary to compensate the variation of dc input voltage, regulate the output voltage of inverter, and to adjust the output frequency to the desired value. There are various techniques to vary the inverter gain. The most operational method of controlling the gain and output voltage waveform is sinusoidal pulse-width modulation (SPWM) technique. In SPWM approach, the width of each pulse is varied in proportion to the amplitude of sine wave compared at the center of the same pulse. The gating signals in this approach are shown in Figure 14. The gating signals are generated by comparing a sinusoidal wave as reference signal with triangular carrier wave of frequency f_c. The frequency of reference signal f_r determines the output frequency f_o of inverter, and the peak amplitude of it A_r specifies the modulation index M. Comparing the bidirectional carrier signal v_{tri} with to sinusoidal reference signals $v_{control}$ and $-v_{control}$ results gating signals g_1 and g_4. The output voltage is $v_o = V_d(g_1 - g_4)$. However, g_1 and g_4 can not be released at the same time. The same gating signals can be generate by using unidirectional triangular carrier wave as shown in Figure 15. This method is easy to implementation [18,22,23].

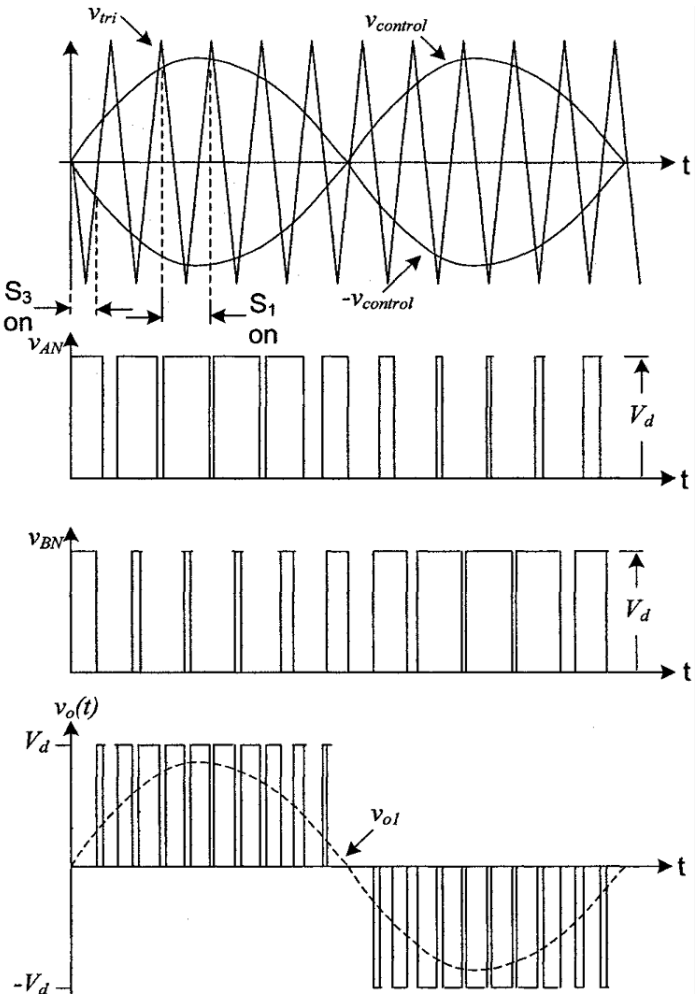

Figure 14. Bidirectional SPWM.

3.1.3.2. Multi-level inverters

The voltage source inverters generate an output voltage levels either 0 or $\pm V_d$. They are called two-level inverter. To obtain a quality output voltage or a current waveform with a minimum amount of THD[1], they require high-switching frequency and various pulse-width modulation (PWM) techniques. However, Switching devices have some limitations in operating at high frequency such as switching losses and device ratings [18].

1 Total Harmonic Distortion

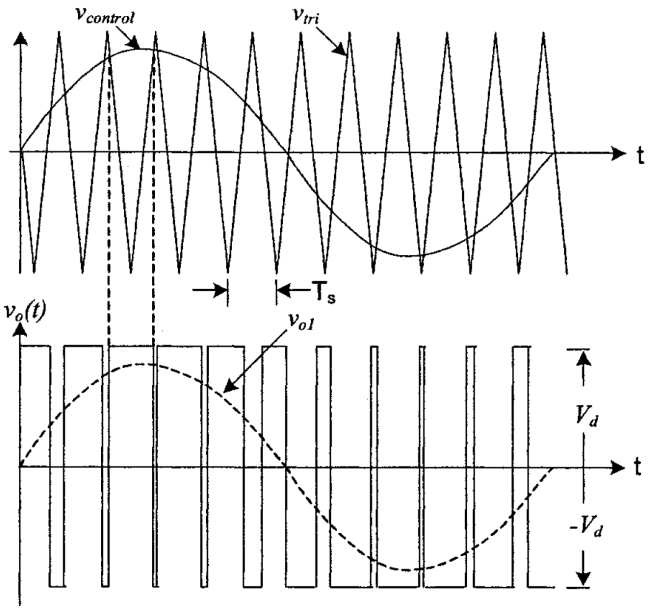

Figure 15. Unidirectional SPWM.

The most significant advantages of multilevel converters in comparison with two-level inverters are incorporating an output voltage waveform from several steps of voltage with significantly improved harmonic content, reduction of output $\frac{dv}{dt}$, electromagnetic interference, filter inductance, etc [24]. The general structure of multilevel converter is to synthesize a near sinusoidal voltage from several levels of dc voltages, typically obtained from capacitor voltage sources [18]. With increasing of levels, the output waveform has more steps, which produce a staircase wave that approaches a desired waveform. Also, as more steps are added to the waveform, the total harmonic distortion (THD) of output wave decreases.

Multilevel converters can be classified into three general types which are diode-clamped multilevel (DCM) converters, cascade multicell (CM) converters, and flying capacitor multicell (FCM) converters and its derivative, the SM converters [24].

3.1.3.2.1. Diode-clamped multilevel (DCM) converter

The n-level diode-clamped multilevel inverter (DCMLI) produces n-levels on the phase voltage and consists of $(n - 1)$ capacitors on the dc bus, $2(n - 1)$ switching devices and $(n - 1)(n - 2)$ clamping diodes. Figure 16 shows a 3-level diode-clamped converter. For a dc bus voltage E, the voltage across each capacitor is $\frac{E}{2}$, and each switching device stress is limited to one capacitor voltage level $\frac{E}{2}$ through clamping diodes.

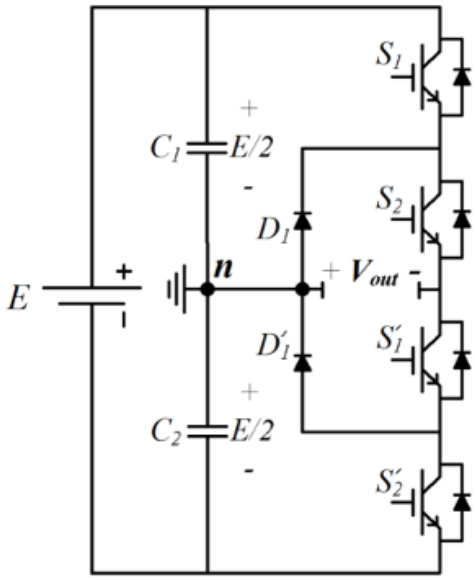

Figure 16. level diode-clamped converter.

To produce a staircase output voltage, for output voltage $V_{out} = \frac{E}{2}$, S_1 and S_2 power switches must be turned on. When $S_1^{'}$ and $S_2^{'}$ power switches are turned on, the output voltage $V_{out} = -\frac{E}{2}$ appears across the load. For output voltage $V_{out} = 0$, $S_1^{'}$ and S_2 power switches must be turned on [18,23].

The significant advantages of DCM inverter can be expressed as follows:

- When the number of levels is high enough, the harmonic content is low enough to avoid need for filters.
- Inverter efficiency is high because all devices are switched at the fundamental frequency.
- The control method is simple.

The significant disadvantages of DCM inverter can be expressed as follows:

- Excessive clamping diodes are required when the number of levels is high.
- It is difficult to control the real power flow of the one converter in multi converter systems [18,23].

3.1.3.2.2. Cascade multilevel (CM) converter

A cascade multilevel inverter consists of series of H-bridge inverter units. The general operation of this multilevel inverter is to synthesize a desired voltage from several separate dc sources, which may be obtained from wind turbines, batteries, or other voltage sources. Figure 17 shows the general structure of a cascade multilevel inverter with isolated dc voltage sources.

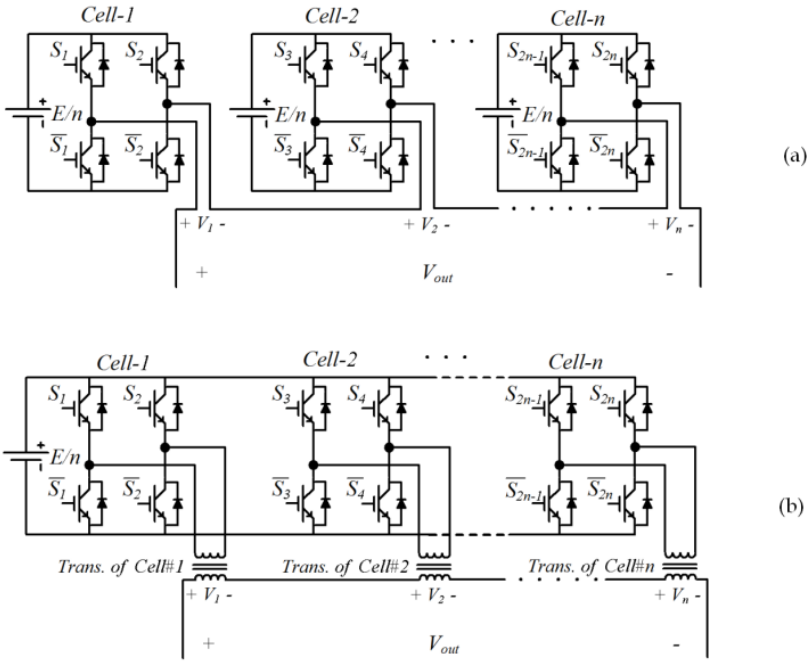

Figure 17. The 2n+1 levels cascade multilevel inverter: (a) with separated dc voltage sources. (b) with one dc voltage source and isolator transformers.

Each inverter can produce three different levels of voltage outputs, $+E$, 0, and $-E$, by connecting the dc source to the ac output side by different states of four switches, S_1, S_2, $\bar{S}_1$, and $\bar{S}_2$. Table 1 shows five switch states for H-bridge inverter. The phase output voltage is obtain by the sum of inverter outputs. Hence, the CM inverter output voltage becomes

$$v_{out} = \sum_{i=1}^{n} v_i \tag{56}$$

where n is number of cells and v_i is the output voltage of cell i.

If n is number of cells, the output phase voltage level is $2n + 1$. Thus, a five-level CM inverter needs 2 bridge inverters with separated dc voltage sources. Table 2 shows the switches states for five-level CM inverter [18,23].

Output Voltage Level	State of (S_1, S_2, S_3, S_4)	Number of States
$+\frac{2}{2}E$	(1, 0 , 1 , 0)	1
$+\frac{1}{2}E$	(1, 0 , 1 , 1) , (1, 0 , 0 , 0) , (1, 1 , 1 , 0) , (0, 0 , 1 , 0)	4
0	(1, 1 , 1 , 1) , (1, 1 , 0 , 0) , (0, 0, 0, 0) , (0, 0 , 1 , 1)	4
$-\frac{1}{2}E$	(0 , 1 , 1 , 1) , (0, 1 , 0 , 0) , (1, 1 , 0 , 1) , (0, 0 , 0 , 1)	4
$-\frac{2}{2}E$	(0, 1 , 0 , 1)	1

Table 2. Switches states for a five-level CM inverter.

The significant advantages of the CM inverter can be expressed as follows:

- Compared with the DCM and FCM inverters, it requires the minimum number of components to achieve the same number of voltage levels.
- Soft-switching techniques can be used to reduce switching losses and device stresses.

The significant disadvantage of the CM inverter can be expressed as follows:

- It needs separate dc voltage sources for real power conversions [18,23].

3.1.3.2.3. Flying capacitor multicell (FCM) converter

The FCM converters consist of ladder connection of cells while each cell in FCM is made up of a flying capacitor and a pair of semiconductor switches with a complimentary state. The commutation between adjacent cells with their associated flying capacitors charged to the specific values generates different levels of chopped input voltage at the output side of converter [24]. The voltage balancing of flying capacitors which guarantees the safe operation of the converter is a important subject in these topologies [23, 24]. The capacitors voltage balancing which is called self-balancing occurs if phase-shifted carrier pulse-width modulation (PSC-PWM) technique is applied to the converter control pattern [24]. Figure 18 and Figure 19 show the general structure of a flying capacitor multilevel (FCM) inverter and the phase-shifted carrier pulse-width modulation (PSC-PWM) technique for five-level FCM inverter, respectively.

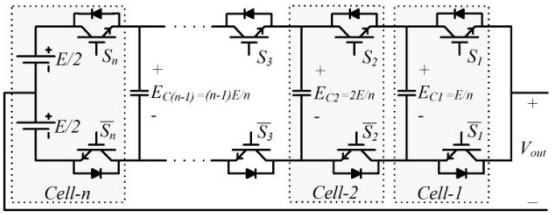

Figure 18. The *n* cells (*n* + 1 levels) FCM inverter.

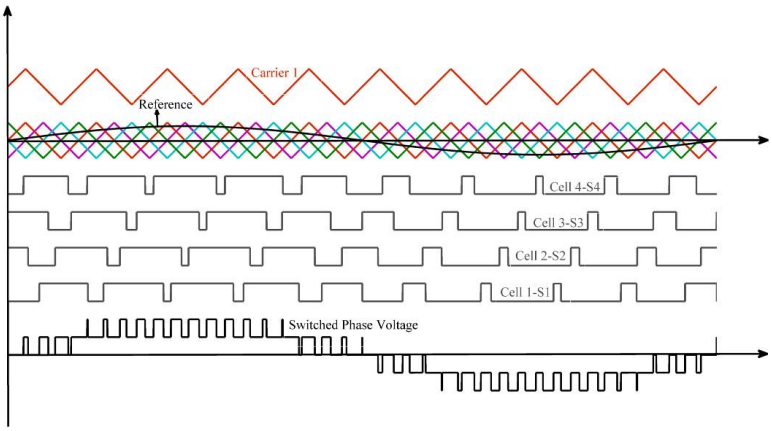

Figure 19. The phase-shifted carrier pulse-width modulation (PSC-PWM) technique for five-level FCM inverter.

The significant advantages of the FCM inverter can be expressed as follows:

- No need for isolation of dc links and transformerless operation capability.
- No need for clamping diodes.
- Availability of redundant states balance and inherent self-balancing property of the voltage across flying capacitors.
- Equal distribution of switching stress between power switches.

The significant disadvantages of the FCM inverter can be expressed as follows:

- A large number of flying capacitors is required when the number of levels is high.
- The inverter control can be very complicated [18,23,24].

Table 3 shows the switches states for five-level FCM inverter.

Output Voltage Level	State of (S_4, S_3, S_2, S_1)	Number of States
$+\frac{2}{4}E$	(1, 1 , 1 , 1)	1
$+\frac{1}{4}E$	(1, 1 , 1 , 0) , (1, 1 , 0 , 1) , (1, 0 , 1 , 1) , (0, 1 , 1 , 1)	4
0	(1, 1 , 0 , 0) , (1, 0 , 0 , 1) , (0, 0, 1, 1) , (0, 1 , 1 , 0)	4
$-\frac{1}{4}E$	(0, 0 , 0 , 1) , (0, 0 , 1 , 0) , (0, 1 , 0 , 0) , (1, 0 , 0 , 0)	4
$-\frac{2}{4}E$	(0, 0 , 0 , 0)	1

Table 3. Switches states for a five-level FCM inverter.

4. Small-scale wind energy conversion system

Small-scale wind conversion system may be integrated into loads or power systems with full rated power electronic converters. The wind turbines with a full scale power converter between the generator and load give the extra technical performance. Usually, a back-to-back voltage source converter (VSC) is used in order to achieve full control of the active and reactive power. But in this case, the control of whole system would be a difficult task. Since the generator has been decoupled from electric load, it can be operated at wide range frequency (speed) condition and maximum power extract. Figure 20 shows two most used solutions with full-scale power converters. Both solutions have almost the same controllable characteristics since the generator is decoupled from the load by a dc link [1,17].

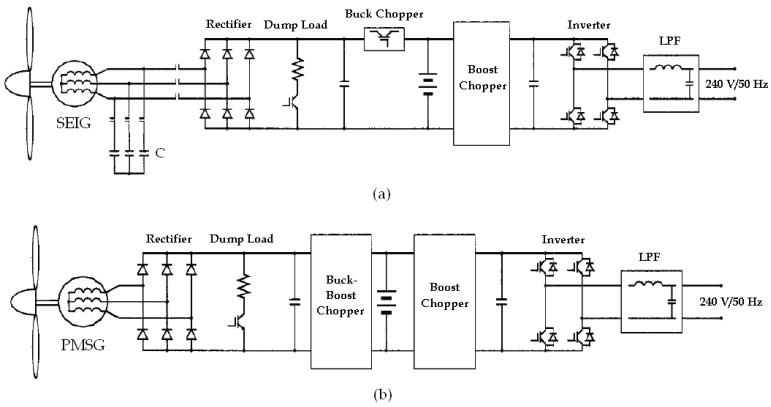

Figure 20. Small-scale wind energy conversion system. (a)self-excited induction generator with gearbox. (b)direct coupled permanent magnet synchronous generator.

The configuration shown in Figure 20(a) is characterized by having a gearbox. The wind turbine system with a SEIG and full rated power electronic converters is shown in Figure 20(a). Multipole systems with the permanent magnet synchronous generator without a gearbox is shown in Figure 20(b).

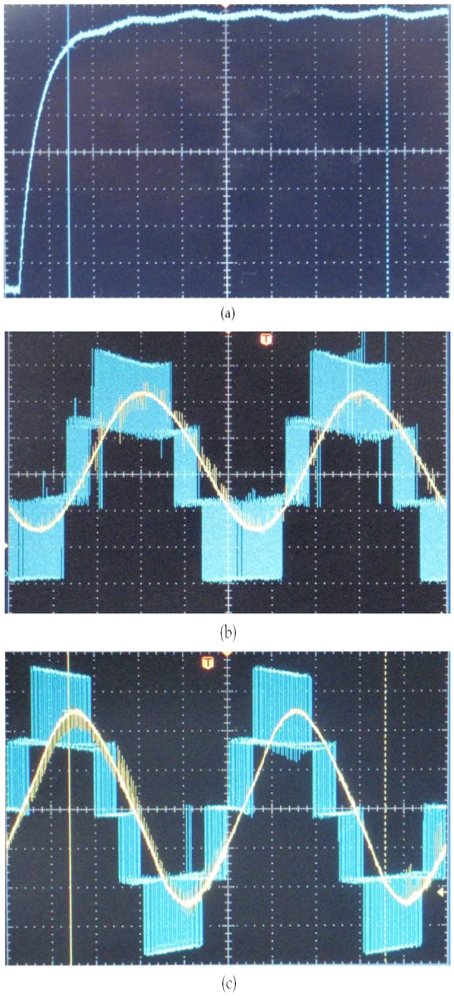

Figure 21. a) output regulated voltage of DC/DC boost converter. (b) output AC voltage and current of DC/AC 4 levels FCMC. (c) output AC voltage and current of DC/AC 5 levels FCMC [23].

The grid connected 1 KW small scale wind generation system has been modelled, designed and implemented in renewable energy research center of sahand university of technology. In this project the maximum power point tracking method has been used to control of varia-

ble speed small scale wind turbine. Wind turbine consist of axial flux permanent magnet synchronous generator (AFPMSG), rectifier, DC/DC boost chopper, maximum power point tracking controller, inverter and load. Tracking system is embedded in boost chopper controller in order to regulate wind turbine shaft at optimum speed to extract maximum power from wind. Two inverters such as: 4 and 5 levels flying capacitor multi-cell converter (FCMC) have been implemented. The small scale wind generation system has been simulated on MATLAB/Simulink platform. Simulation results clearly demonstrate that designed small scale wind generation system can operate correctly under various wind speeds. The regulated output DC voltage of DC/DC boost chopper has been converted to AC voltage with 4 and 5 levels flying capacitor multi-cell converter (FCMC). The DC/DC boost chopper and inverter include IGBT transistors, interfacing board, driver boards, voltage and current sensors and ATMEGA16 microcontroller board. The phase shifted pulse width modulation (PSPWM) and pulse width modulation (PWM) techniques have been implemented on multicell inverters and DC/DC boost chopper respectively [23]. The experimental results of the 1 KW small scale wind generation system have been shown in Figure 21. Figure 21(a) shows the output regulated voltage of DC/DC boost converter. Whereas, Figure 21(b) shows the output AC voltage and current of DC/AC 4 levels FCMC, and Figure 21(b) shows the output AC voltage and current of DC/AC 5 levels FCMC.

5. Conclusion

This chapter has reviewed different power electronic converters for small-scale wind turbine systems. Various arrangements of small scale wind generators with different generators and control systems are described. In compare with gearbox-connected wind generators, the main advantages of direct–drive wind generator systems are higher overall efficiency, reliability, and availability due to omitting the gearbox. Considering the improved performance and reduced cost of PM materials over recent years, direct drive PMSG have gained more attention in small scale wind generation systems. Different types of DC/DC converter for small-scale wind turbine output voltage regulation are described.

Several topolgies of DC/AC inverter for DC/DC converter output voltage conversion are investigated. The most significant advantages of multilevel converters in comparison with two-level inverters are low harmonic contents, low output $\frac{dv}{dt}$ and electromagnetic interference, and reduced size of filter inductance. Even though all types of multi-level converters such as DCMC, CMC, and FCMC present major advantages for small-scale wind energy conversion applications, but FCMCs have gained more attention in small-scale wind energy conversion systems.

Two most used solutions with full-scale power converters are investigated. Since the generator is decoupled from the load by a dc link, so both solutions have almost the same controllable characteristics. The wind turbines with a full scale power converter between the generator and load give the extra technical performance. The provided ex-

perimental results verify the good performance and feasibility of the proposed full-scale power electronic converter.

Author details

Mostafa Abarzadeh[1*], Hossein Madadi Kojabadi[1] and Liuchen Chang[2]

*Address all correspondence to: mst.abarzadeh@gmail.com

1 Renewable Energy Research Center, Sahand University of Technology, Tabriz, Iran

2 Department of Electrical & Computer Engineering, University of New Brunswick, NB, Canada

References

[1] Abarzadeh, M., Madadi, kojabadi. H., & Chang, L. Small Scale Wind Energy Conversion Systems In: Al-Bahadly I. (ed.) Wind Turbines: InTech; (2011). , 639-652.

[2] Yuan Lo K., Ming Chen Y., Ruei Chang Y. MPPT Battery Charger for Stand-Alone Wind Power System. Power Electronics, IEEE Transactions on. 2011;26(6) 1631 - 1638.

[3] Smith J., Thresher R., Zavadil R., DeMeo E., Piwko R., Ernst B., and Ackermann T. A mighty wind. IEEE Power Energy Mag.2009;7(2) 41-51.

[4] Nayar C., Dehbonei H., Chang L. A Low Cost Power Electronic Interface for Small Scale Wind Generators in Single Phase Distributed Power Generation System: conference proceedings, December 14-17, 2008, The University of Tasmania, Hobart, Tasmania, Australia: AUPEC; 2005.

[5] Pathmanathan, M., Tang, C., Soong, W. L., & Ertugrul, N. Comparison of Power Converters for Small-Scale Wind Turbine Operation: conference proceedings, September 25-28, (2005). Sydney,Australia: AUPEC; 2008.

[6] American Wind Energy Association Annual Wind Industry Report (year ending(2008). AWEA. http://www.awea.org

[7] Borowy B. S., Salameh Z. M., Dynamic response of a stand-alone wind energy conversion system with battery energy storage to a wind gust, IEEE Trans. Energy Convers. 1997;12(1) 73–78.

[8] Billinton R., Bagen, Cui Y., Reliability evaluation of small standalone wind energy conversion systems using a time series simulation model. IEE Proc.-Generat. Transmiss. Distrib. (2003). , 150(1), 96-100.

[9] Bagen, Billinton R., Evaluation of different operating strategies in small stand-alone power systems.IEEE Trans. Energy Convers. (2005). , 20(3), 654-660.

[10] Singh, B., & Kasal, G. K. Power Electronics in Small Scale Wind Turbine Systems. IEEE Trans. Power Electron. (2008). , 23(3), 1170-1177.

[11] Chen, Z., & Spooner, E. Power Electronics in Small Scale Wind Turbine Systems. IEE Proc. Electr. Power Appl. (1998). , 145(4), 273-283.

[12] Chen, Z., & Spooner, E. Grid Power Electronics in Small Scale Wind Turbine Systems. bines. IEEE Trans. Energy Convers.(2001). , 16(2), 148-154.

[13] Probst, O., Martinez, J., Elizondo, J., & Monroy, O. Small Wind Turbine Technology In: Al-Bahadly I. (ed.) Wind Turbines: InTech; (2011). , 107-136.

[14] Muljadi, E., Forsyth, T., & Butterfield, C. P. Power Electronics in Small Scale Wind Turbine Systems. conference proceedings: April May 1,(1998). Windpower '98 Bakersfield, CA., 27.

[15] Muljadi, E., Pierce, K., & Migliore, P. (2000). Power Electronics in Small Scale Wind Turbine Systems. *Journal of Wind Engineering and Industrial Aerodynamics*, 85(3), 277-291.

[16] Bialasiewicz J.T.Furling control for small wind turbine power regulation: conference proceedings, (9-11 June 2003). Industrial Electronics, 2003. ISIE '03. 2003 IEEE International Symposium on., 9-11.

[17] Blaabjerg, F., Liserre, M., & , K. Power Electronics in Small Scale Wind Turbine Systems. ine Systems. Power Electronics, IEEE Transactions on. (2012). , 48(2), 708-719.

[18] Rashid M.H. Power Electronics, circuits, devices and applications, third edition.Prentice-Hall; (2007).

[19] Keith, H., & Billings, . Power Electronics in Small Scale Wind Turbine Systems. McGraw-Hill; (1999).

[20] Marty Brown. Power Supply Cookbook, second edition.Butterworth-Heinemann; (2001).

[21] Czarkowski D. DC-DC Converters In: Rashid M.H. (ed.) Power Electronics Handbook: ACADEMIC PRESS; 2001. P211-223.

[22] Espinoza J.R. Inverters In: Rashid M.H. (ed.) Power Electronics Handbook: ACADEMIC PRESS;. (2001). 225-267.

[23] Abarzadeh, M., Modelling, Design., Implementation, of., Grid, Connected., Small, Scale., Wind, Generation., & System, . Msc thesis. Sahand University of Tech; (2011).

[24] Dargahi, V., Khoshkbar, Sadigh. A., Abarzadeh, M., Alizadeh, Pahlavani. M. R., & Shoulaie, A. Power Electronics in Small Scale Wind Turbine Systems. Power Electronics, IEEE Transactions on. (2012). , 27(9), 3875-3887.