25

Time-Varying Discrete-Time Wavelet Transforms

Guangyu Wang, Qianbin Chen and Zufan Zhang
Chongqing Key Lab of Mobile Communications, Chongqing University of Posts and Telecommunications (CQUPT)
China

1. Introduction

Discrete-time wavelet transform (DWT) is found to be better than other transforms in the time-varying system analysis, e.g. for time-varying parametric modelling [16], time-varying systems identification [17], time-varying parameter estimation [18] and time domain signal analysis [19]. In the literature the common method to analyze the time-varying system using discrete-time wavelet transform is to model the time-varying system with a time-invariant system firstly, because a general analysis of time-varying discrete-time wavelet transform (TV-DWT) is still missing. To analyze the time-varying system directly using the time-varying discrete-time wavelet transform, we need the theory for the time-varying discrete-time wavelet transform.

The theory of time-invariant discrete-time wavelet transform (DWT) are quite complete [1,2,3]. For time-varying discrete-time wavelet transform, in literature there are some papers related with this topic by studying the changes of two different filter banks [10,11,12]. In [10] the authors analyzed the time-varying wavelet transform through changing the two-band filter banks used in the tree-structured implementation of DWTs with an simple example. In [11] the time-varying wavelet packets built with time-varying cosine-modulated filter banks were investigated. Similar with [10], in [12] the authors studied time-varying wavelet packets more theoretically with changing the two orthogonal two-band filter banks used in tree-structure of DWTs. Generally, in the existed theory of time-varying discrete-time wavelet transform it lacks a basic definition and description of the time-varying discrete-time wavelet transform. A basic analysis of time-varying discrete-time wavelet transform is also missing. The author has studied TV-DWT since some years and has published a series of papers about this topic. In this Chapter we summarize the author's main research results.

In our method the time-varying discrete-time wavelet transform is studied using a time-varying octave-band filter bank with tree structure. With this implementation the analysis of the time-varying discrete-time wavelet transform is equal to the analysis of the time-varying discrete-time octave-band filter bank. Then, the time-varying filter bank theory can be used in TV-DWT analysis. In this chapter we provide some theorems for the time-varying discrete-time wavelet transform with proofs.

2. Formulation of time-varying discrete-time wavelet transforms

From the point of view of digital signal processing, the time-varying discrete-time wavelet transform can be implemented by a time-varying octave-band filter bank with tree structure. Fig. 1 shows the most general time-varying discrete-time wavelet transform implemented with a time-varying octave-band filter bank, where the lowpass and highpass filter $H_l(z,m)$, $H_u(z,m)$, the stage number of the split-merge $J(m)$, all are varying with time index m. In other words, both the frequency characteristic and the time-frequency tiling of the discrete-time wavelet transform are varying with time. Fig. 2 shows the time-varying nonuniform filter bank implementation. With this implementation the analysis of the time-varying discrete-time wavelet transform is equal to the analysis of the time-varying discrete-time octave-band filter bank.

Note that we define the time-varying discrete-time wavelet transform varying with index m which is equivalent to the output index at the last stage of octave-band filter banks. The time indices of the other output are related to m by

$$m_j = 2^{J(m)-i-j} \cdot m, \quad 0 \le j \le J(m) - 2. \tag{1}$$

In the literature there are some papers related with this topic by studying changes between two time-invariant filter banks [10,11,12]. In particular, in [10] the authors have discussed the transition behavior during the change between two time-invariant discrete-time wavelet transforms. Different from the existed publications, in this chapter we analyze the general time-varying discrete-time wavelet transform in detail based on the octave-band filter bank and the nonuniform filter bank implementation.

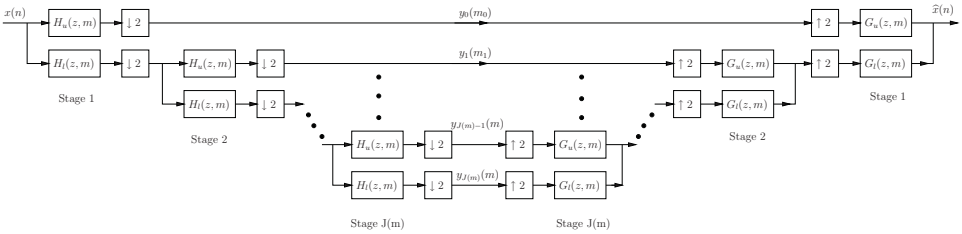

Fig. 1. Time-varying discrete-time wavelet transform implemented with time-varying octave-band filter banks.

3. Implementation with time-varying octave-band filter Banks

To make the analysis simple, in the following analysis we suppose that the stage number J does not change with time and is a constant. Then we get a J-stage time-varying octave-band filter bank. Just as depicted in Fig. 1, a J-stage octave-band time-varying filter bank consists of J stages of two-channel time-varying filter bank. In the analysis side, the input signal $x(n)$ is first split by the two-channel time-varying filter bank at the first stage, then the lowpass output is spilt again by the same two-band time-varying filter bank at the second stage.

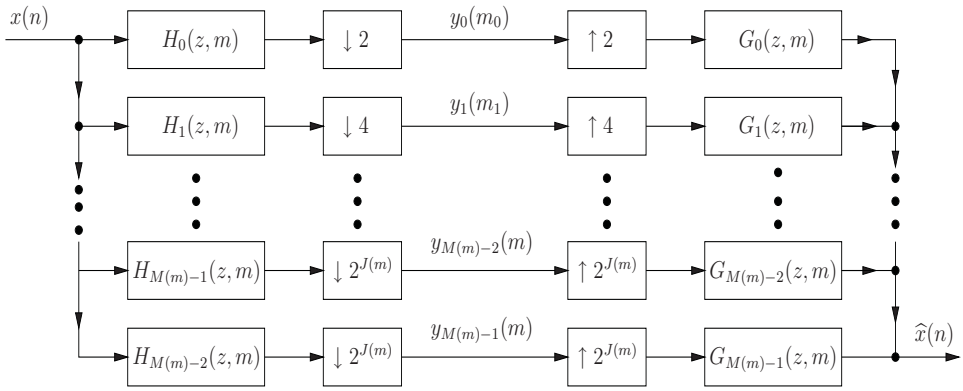

Fig. 2. Time-varying nonuniform filter bank implementation, where $M(m) = 2^{J(m)}$.

The process is ongoing until J-stage. In the synthesis side, the signal is merged to generate the reconstructed signal $\widehat{x}(n)$. From the theorem of time-invariant discrete-time wavelet transform [2], we know that if the individual two-channel filter bank, or each split-merge pair is perfectly reconstructed, the octave-band filter bank is as well. Such statement is also valid for the time-varying octave-band filter bank. Therefore, we have following theorem.

Theorem 1: A time-varying discrete-time wavelet transform implemented with a time-varying octave-band filter bank is a biorthogonal time-varying transform if each two-channel time-varying filter bank is perfectly reconstructed.

We cannot use the method used in the time-invariant case to prove the above theorem because the system is time-varying. To prove theorem 1, we define analysis and synthesis matrices of the j-stage two-channel time-varying filter bank shown in Fig. 3 as

$$\mathbf{T}_{ma}^{(j)} = \begin{bmatrix} & \vdots & \vdots & \vdots & \vdots & \vdots & \vdots & \\ \cdots & \mathbf{h}_0(m_j) & \mathbf{h}_1(m_j) & \cdots & \mathbf{h}_{N(j)-1}(m_j) & \mathbf{h}_{N(j)}(m_j) & \mathbf{h}_{N(j)+1}(m_j) & \cdots \\ \cdots & \mathbf{0} & \mathbf{h}_0(m_j) & \cdots & \mathbf{h}_{N(j)-2}(m_j) & \mathbf{h}_{N(j)-1}(m_j) & \mathbf{h}_{N(j)}(m_j) & \cdots \\ \cdots & \vdots & \vdots & \ddots & \vdots & \vdots & \vdots & \cdots \\ \cdots & \mathbf{0} & \mathbf{0} & \cdots & \mathbf{h}_0(m_j) & \mathbf{h}_1(m_j) & \mathbf{h}_2(m_j) & \cdots \\ \cdots & \mathbf{0} & \mathbf{0} & \cdots & \mathbf{0} & \mathbf{h}_0(m_j+1) & \mathbf{h}_1(m_j+1) & \cdots \\ & \vdots & \vdots & \vdots & \vdots & \vdots & \vdots & \end{bmatrix} \tag{2}$$

$$\mathbf{T}_{ms}^{(j)} = \begin{bmatrix} & \vdots & \vdots & \vdots & \vdots & \vdots & \\ \cdots & \mathbf{g}_0(m_j) & \mathbf{0} & \cdots & \mathbf{0} & \mathbf{0} & \cdots \\ \cdots & \mathbf{g}_1(m_j) & \mathbf{g}_0(m_j) & \cdots & \mathbf{0} & \mathbf{0} & \cdots \\ \cdots & \vdots & \vdots & \ddots & \vdots & \vdots & \cdots \\ \cdots & \mathbf{g}_{N(j)-1}(m_j) & \mathbf{g}_{N(j)-2}(m_j) & \cdots & \mathbf{g}_0(m_j) & \mathbf{0} & \cdots \\ \cdots & \mathbf{g}_{N(j)}(m_j) & \mathbf{g}_{N(j)-1}(m_j) & \cdots & \mathbf{g}_1(m_j) & \mathbf{g}_0(m_j+1) & \cdots \\ \cdots & \mathbf{g}_{N(j)+1}(m_j) & \mathbf{g}_{N(j)}(m_j) & \cdots & \mathbf{g}_2(m_j) & \mathbf{g}_1(m_j+1) & \cdots \\ & \vdots & \vdots & \vdots & & & \end{bmatrix}, \tag{3}$$

where

$$N(j) = 2^{I-j}, \quad j = 1, 2, \cdots,, \tag{4}$$

and

$$\mathbf{h}_i(m_j) = \begin{bmatrix} h_u(L-2i-1, m_j) & h_u(L-2i-2, m_j) \\ h_l(L-2i-1, m_j) & h_l(L-2i-2, m_j) \end{bmatrix}, \tag{5}$$

$$\mathbf{g}_i(m_j) = \begin{bmatrix} g_u(2i, m_j) & g_l(2i, m_j) \\ g_u(2i+1, m_j) & g_l(2i+1, m_j) \end{bmatrix}, \tag{6}$$

where L is the filter length.

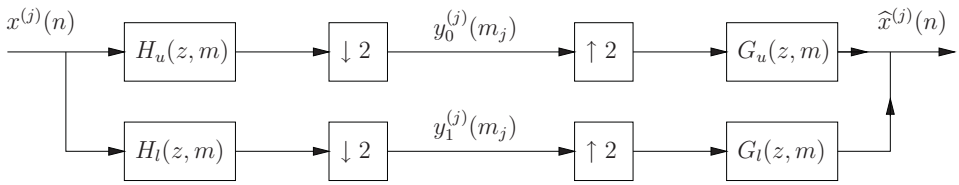

Fig. 3. The j-th stage two-channel time-varying filter bank.

Furthermore, we define two special matrices $\mathbf{\Lambda}_0$ and $\mathbf{\Lambda}_1$

$$\mathbf{\Lambda}_0 = \begin{bmatrix} \vdots & \vdots & \vdots & \vdots & \vdots & \vdots & \\ \cdots & 1 & 0 & 0 & 0 & 0 & \cdots \\ \cdots & 0 & 0 & 1 & 0 & 0 & \cdots \\ \vdots & \vdots & \vdots & \vdots & \vdots & \vdots & \end{bmatrix} \tag{7}$$

$$\mathbf{\Lambda}_1 = \begin{bmatrix} \vdots & \vdots & \vdots & \vdots & \vdots & \vdots & \\ \cdots & 0 & 1 & 0 & 0 & 0 & \cdots \\ \cdots & 0 & 0 & 0 & 1 & 0 & \cdots \\ \vdots & \vdots & \vdots & \vdots & \vdots & \vdots & \end{bmatrix}, \tag{8}$$

to extract the lowpass and highpass output like

$$\mathbf{y}_0^{(j)} = \mathbf{\Lambda}_0 \mathbf{y}^{(j)}, \tag{9}$$

$$\mathbf{y}_1^{(j)} = \mathbf{\Lambda}_1 \mathbf{y}^{(j)}, \tag{10}$$

where

$$\mathbf{y}^{(j)} = \left[\cdots y_0^{(j)}(-1)\ y_1^{(j)}(-1)\ y_0^{(j)}(0)\ y_1^{(j)}(0)\ y_0^{(j)}(1)\ y_1^{(j)}(1) \cdots \right]^T, \tag{11}$$

$$\mathbf{y}_0^{(j)} = \left[\cdots y_0^{(j)}(-1)\ y_0^{(j)}(0)\ y_0^{(j)}(1) \cdots \right]^T, \tag{12}$$

$$\mathbf{y}_1^{(j)} = \left[\cdots y_1^{(j)}(-1)\ y_1^{(j)}(0)\ y_1^{(j)}(1) \cdots \right]^T. \tag{13}$$

Based on the above matrix definitions we can describe the filter bank at the j-th stage showed in Fig. 3 as

$$\widehat{\mathbf{x}}^{(j)} = \mathbf{T}_{ms}^{(j)}\ \mathbf{T}_{ma}^{(j)}\ \mathbf{x}^{(j)}. \tag{14}$$

After adding the (j+1)-th stage with a biorthogonal time-varying two-channel filter bank shown in Fig. 4, we have

$$\begin{aligned} \widehat{\mathbf{x}}^{(j)} &= \mathbf{T}_{ms}^{(j)}\ \mathbf{y}^{(j)} \\ &= \mathbf{T}_{ms}^{(j)}\ \left\{ \mathbf{\Lambda}_0^T \mathbf{y}_0^{(j)} + \mathbf{\Lambda}_1^T \mathbf{y}_1^{(j)} \right\} \\ &= \mathbf{T}_{ms}^{(j)}\ \left\{ \mathbf{\Lambda}_0^T \mathbf{\Lambda}_0 \mathbf{T}_{ma}^{(j)} \mathbf{x}^{(j)} + \mathbf{\Lambda}_1^T\ \mathbf{T}_{ms}^{(j+1)}\ \mathbf{T}_{ma}^{(j+1)} \mathbf{\Lambda}_1 \mathbf{T}_{ma}^{(j)} \mathbf{x}^{(j)} \right\}. \end{aligned} \tag{15}$$

Because we suppose that the added two-channel filter bank is biorthogonal, we have

$$\mathbf{T}_{ms}^{(j+1)}\ \mathbf{T}_{ma}^{(j+1)} = \mathbf{I}, \tag{16}$$

$$\mathbf{\Lambda}_0^T \mathbf{\Lambda}_0 + \mathbf{\Lambda}_1^T \mathbf{\Lambda}_1 = \mathbf{I}. \tag{17}$$

Then, we can rewrite (15) as

$$\begin{aligned} \widehat{\mathbf{x}}^{(j)} &= \mathbf{T}_{ms}^{(j)} \left\{ \mathbf{\Lambda}_0^T \mathbf{\Lambda}_0 + \mathbf{\Lambda}_1^T \mathbf{\Lambda}_1 \right\} \mathbf{T}_{ma}^{(j)}\ \mathbf{x}^{(j)} \\ &= \mathbf{T}_{ms}^{(j)}\ \mathbf{T}_{ma}^{(j)}\ \mathbf{x}^{(j)} \\ &= \mathbf{x}^{(j)} \end{aligned} \tag{18}$$

which means that the time-varying octave-band filter bank is still perfectly reconstructed after adding next stage of time-varying biorthogonal two-channel filter bank. In other words, theorem 1 is correct.

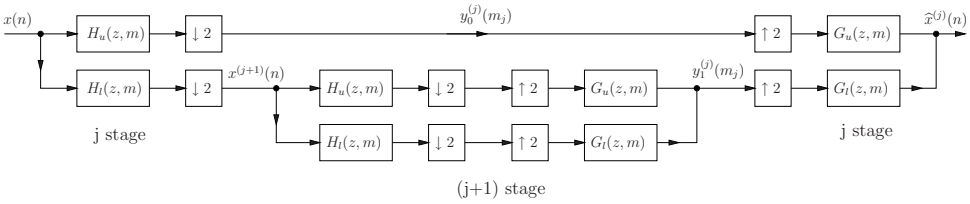

Fig. 4. Adding the $(j+1)$-th stage.

4. Implementation with time-varying nonuniform filter banks

Fig. 2 shows another implementation of a time-varying wavelet transform with $(J(m)+1)$-channel time-varying nonuniform filter bank. To make the analysis easy we suppose that $J(m)$ does not change with time and is equal to constant J. For analysis of the $(J+1)$-channel time-varying nonuniform filter bank we first reconstruct the nonuniform filter bank to a time-varying uniform filter bank through adding following filters between $H_i(z,m)$ and $H_{i+1}(z,m)$ $(0 \leq j\ J-1)$

$$H_{i,k}(z,m) = z^{-k\cdot 2^{i+1}}\ H_i(z,m),\ \ 1 \leq k \leq 2^{J-i-1}-1. \tag{19}$$

After adding additional filters in the nonuniform filter bank in Fig. 2 the filter bank becomes M-channel time-varying uniform filter filter bank. The number of channel M is calculated by

$$\begin{aligned} M &= \sum_{i=0}^{J-2}(2^{J-i-1}-1)+(J+1) \\ &= 2^{J-1}\sum_{i=0}^{J-2}2^{-i}+2 \\ &= 2^{J}(1-2\cdot 2^{-J})+2 \\ &= 2^{J}. \end{aligned} \tag{20}$$

For the time-varying system in Fig. 5 we have following theorem.

Theorem 2: A time-varying discrete-time wavelet transform implemented with a time-varying nonuniform filter bank is biorthogonal if each two-channel time-varying filter bank in its tree-structured implementation is perfectly reconstructed.

To prove theorem 2, we need to describe the filter $H_i(z,m)$ in Fig. 5 based on the tree structure in Fig. 1. In the time-invariant discrete-time wavelet transform the description of such filters can be simply got using the convolution role in the transform-domain. However, in the time-varying case, we cannot describe $H_i(z,m)$ as product of functions in the previous stages, like $H_0(z,m)H_1(z^2,m)$, because the system is time-varying and the convolution role does not exist. Referencing to definitions of $\mathbf{T}_{ma}^{(j)}$ and $\mathbf{T}_{ms}^{(j)}$ in (2) and (3), we find that the analysis output

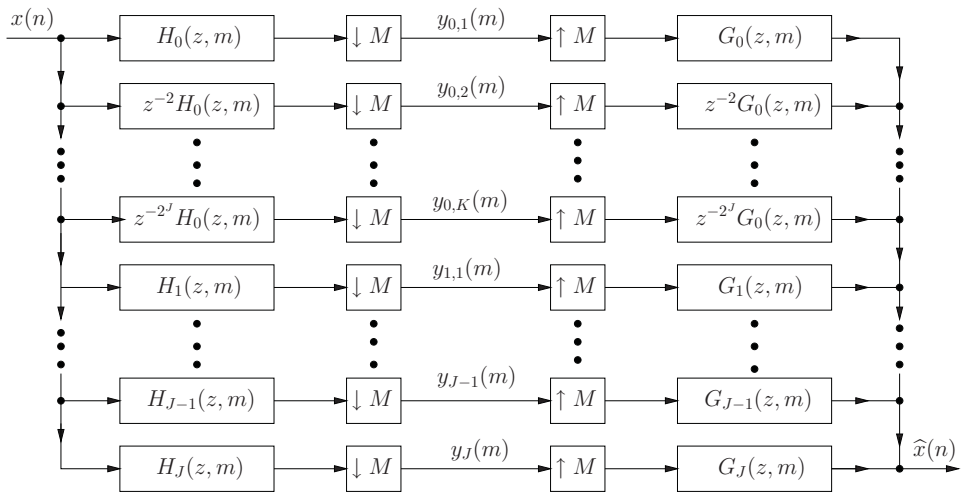

Fig. 5. The equivalent M-channel time-varying uniform filter bank.

$\mathbf{y}_0(m_0)$ can be expressed as

$$\mathbf{y}_0 = \mathbf{\Lambda}_0\, \mathbf{T}_{ma}^{(1)}\, \mathbf{x}, \tag{21}$$

where

$$\mathbf{y}_0 = [\, \cdots \mathbf{y}_0(-1)\ \mathbf{y}_0(0)\ \mathbf{y}_0(1) \cdots]^T, \tag{22}$$

$$\mathbf{y}_0(m) = [\, y_{0,1}(m)\ y_{0,2}(m)\ \cdots y_{0,K}(m)\,]^T, \tag{23}$$

and $K = 2^{2^J-1} - 1$. In general, we have

$$\mathbf{y}_{j-1} = \underbrace{\mathbf{\Lambda}_0\, \mathbf{T}_{ma}^{(j)}\, \mathbf{\Lambda}_1\, \mathbf{T}_{ma}^{(j-1)}\ \cdots\ \mathbf{\Lambda}_1\, \mathbf{T}_{ma}^{(1)}}_{\mathbf{H}_{j-1}}\ \mathbf{x}, \tag{24}$$

where $1 \le j \le J-1$, and

$$\mathbf{y}_{J-1} = \mathbf{\Lambda}_0\, \mathbf{T}_{ma}^{(J)}\, \mathbf{\Lambda}_1\, \mathbf{T}_{ma}^{(J-1)}\ \cdots\ \mathbf{\Lambda}_1\, \mathbf{T}_{ma}^{(1)}\, \mathbf{x} = \mathbf{H}_{J-1}\, \mathbf{x}, \tag{25}$$

$$\mathbf{y}_J = \mathbf{\Lambda}_1\, \mathbf{T}_{ma}^{(J)}\, \mathbf{\Lambda}_1\, \mathbf{T}_{ma}^{(J-1)}\ \cdots\ \mathbf{\Lambda}_1\, \mathbf{T}_{ma}^{(1)}\, \mathbf{x} = \mathbf{H}_J\, \mathbf{x}, \tag{26}$$

where

$$\mathbf{y}_{j-1} = \Big[\, \cdots \mathbf{y}_{j-1}(-1)\ \mathbf{y}_{j-1}(0)\ \mathbf{y}_{j-1}(1) \cdots \Big]^T, \tag{27}$$

$$\mathbf{y}_{j-1}(m) = \Big[\, y_{j-1,1}(m)\ y_{j-1,2}(m)\ \cdots y_{j-1,K}(m)\, \Big]^T, \tag{28}$$

for $K = 2^{2^J - j} - 1$ and $1 \leq j \leq J-2$, and

$$\mathbf{y}_{J-1} = \left[\cdots \; y_{J-1}(-1) \; y_{J-1}(0) \; y_{J-1}(1) \cdots \right]^T, \tag{29}$$

$$\mathbf{y}_J = \left[\cdots \; y_J(-1) \; y_J(0) \; y_J(1) \cdots \right]^T. \tag{30}$$

At synthesis side, we have similar definitions as

$$\widehat{\mathbf{x}}_{j-1} = \underbrace{\mathbf{T}_{ms}^{(1)} \; \mathbf{\Lambda}_1^T \; \mathbf{T}_{ms}^{(2)} \; \cdots \; \mathbf{\Lambda}_1^T \; \mathbf{T}_{ms}^{(j)} \; \mathbf{\Lambda}_0^T}_{\mathbf{G}_{j-1}} \; \mathbf{y}_{j-1}, \tag{31}$$

$$\widehat{\mathbf{x}}_{J-1} = \mathbf{T}_{ms}^{(1)} \; \mathbf{\Lambda}_1^T \; \mathbf{T}_{ms}^{(2)} \; \cdots \; \mathbf{\Lambda}_1^T \; \mathbf{T}_{ms}^{(J)} \; \mathbf{\Lambda}_0^T \; \mathbf{y}_{J-1} = \mathbf{G}_{J-1} \; \mathbf{y}_{J-1}, \tag{32}$$

$$\widehat{\mathbf{x}}_J = \mathbf{T}_{ms}^{(1)} \; \mathbf{\Lambda}_1^T \; \mathbf{T}_{ms}^{(2)} \; \cdots \; \mathbf{\Lambda}_1^T \; \mathbf{T}_{ms}^{(J)} \; \mathbf{\Lambda}_1^T \; \mathbf{y}_J = \mathbf{G}_J \; \mathbf{y}_J, \tag{33}$$

Now, based on the definition in (23), we can build the analysis output vector for th time-varying filter bank in Fig. 5 as

$$\mathbf{y} = \left[\cdots \; \mathbf{y}_0(-1) \; \cdots \mathbf{y}_J(-1) \; \mathbf{y}_0(0) \; \cdots \mathbf{y}_J(0) \; \mathbf{y}_0(1) \; \cdots \right]^T. \tag{34}$$

Suppose that $\mathbf{T}_{ma}$ and $\mathbf{T}_{ms}$ are the analysis and synthesis matrices for the time-varying filter bank in Fig. 5. Referencing (34), $\mathbf{T}_{ma}$ is constructed by interleaving the rows from $\mathbf{T}_{ma}^{(1)}$ to $\mathbf{T}_{ma}^{(J)}$ with same time index m, $\mathbf{T}_{ms}$ is built with similar way, but interleaving the columns. Then, the production $\mathbf{T}_{ma}^{(1)}\mathbf{T}_{ma}^{(J)}$ can be expressed by

$$\mathbf{T}_{ms} \; \mathbf{T}_{ma} = \sum_{j=0}^{J} \mathbf{G}_j \; \mathbf{H}_j. \tag{35}$$

Substituting $\mathbf{H}_i$ and $\mathbf{G}_i$ defined in (24)-(26) and (31)-(33) into (35), and using properties in (16) and (17), we get

$$\mathbf{T}_{ms} \; \mathbf{T}_{ma} = \mathbf{I}, \tag{36}$$

which means that the time-varying nonuniform filter bank in Fig. 2 is perfectly reconstructed.

Finally, we give another property related with filter coefficients of the time-varying filter bank in Fig. 2. Suppose that $h_i(n,m)$ and $g_i(n,m)$ represent the analysis and synthesis filter coefficients in Fig. 2, then we have following equation

$$< g_i(n-kM, m+r), \; h_j(n-lM, m+s) >= \delta(k-l) \; \delta(i-j) \; \delta(r-s), \tag{37}$$

where $M = 2^J$. The proof of equation (37) can be simply got by using the PR condition in (36).

5. Conclusion

In the theory of discrete-time signal expansion, the wavelet transform is very important. In this chapter, we defined the general discrete time-varying dyadic wavelet transform and analyzed its properties in detail. Some theorems describing properties of time-varying discrete-time wavelet transforms were presented. The conditions for a biorthogonal time-varying discrete-time wavelet transform were given. The theory and algorithms presented in this chapter can be used in design of time-varying discrete-time signal expansion in practice.

6. Acknowledgments

This work is supported by the National Natural Science Foundation of China (No. 61071195) and Sino-Finland Cooperation Project (No. 1018).

7. References

[1] H.S. Malvar, *Signal Processing with Lapped Transforms.* Boston, MA: Artech House, 1992.
[2] M. Vetterli and J. Kovacevic, *Wavelets and Subband Coding,* Englewood Cliffs, NJ: Prentice Hall, 1995.
[3] Alfred Mertins, *Signal Analysis, Wavelets, Filter Banks, Time-Frequency Transforms and Application* England: John Wiley & Sons, 1999.
[4] V. DeBrunner, W. Lou, and J. Thripuraneni, "Multiple Transform Algorithms for Time-Varying Signal Representation," *IEEE Trans. Circuits and Systems-II: Analog and Digital Signal Processing,* vol. 44, No. 8, pp. 663-667, Aug. 1997.
[5] M. Morhac and V. Matousek, "New Adaptive Cosine-Walsh Transform and its Application to Nuclear Data Compression,"*IEEE Trans. Signal Processing,* vol. 48, No. 9, pp. 2663-2696, September 2000.
[6] N. Prelcic, A. Pena, "An Adaptive Tiling of the Time-Frequency Plane with Application to Multiresolution-Based Perceptive Audio Coding," *Signal Processing,* vol. 81, pp. 301-319, Feb. 2001.
[7] P. Srinivasan and L. Jamieson, "High-Quality Audio Compression Using an Adaptive Wavelet Packet Decomposition and Psychoacoustic Modeling," *IEEE Trans. Signal Processing,* vol. 46, No. 4, pp. 1085-1093, April 1998.
[8] ISO/IEC JTCI/SC29, "Information technology-coding of moving pictures and associated audio for digital storage media at up to about 1.5 Mbit/s-IS 11172-3 (audio)," 1992.
[9] C. Guillemot, P. Rault, and P. Onno, "Time-invariant and time-varying multirate filter banks: application to image coding ," *Annales des Telecommunications-Annals of Telecommunications*, vol. 53, No.5-6, pp.192-218, May-Jun 1998.
[10] I. Sodagar, K. Nayebi, and T.P Barnwell,III, "Time-varying filter banks and wavelets," *IEEE Trans. Signal Processing,* vol. 42, No. 11, pp. 2983-2996, Nov. 1994.
[11] R.L. de Queiroz, K.R. Rao, "Time-varying lapped transform and wavelet packets," *IEEE Trans. Signal Processing,* vol. 41, No. 12, pp. 3293-3305, Dec. 1993.
[12] C. Herley, M. Vetterli, "Orthogonal Time-Varying Filter Banks and Wavelet Packets," *IEEE Trans. Signal Processing,* vol. 42, No.10, pp. 2650-2663, Oct. 1994.

[13] G. Wang and U. Heute, “Time-varying MMSE modulated lapped transform and its applications to transform coding for speech and audio signals,” *Signal Processing,* vol. 82, No. 9, pp. 1283-1304, Sept. 2002.

[14] G. Wang, “The most general time-varying filter bank and time-varying lapped transforms,” *IEEE Trans. on Signal Proccesing*, vol. 54, No. 10, pp. 3775-3789, Oct. 2006.

[15] G. Wang, “Analysis of M-channel time-varying filter banks,” *Digital Signal Processing,* vol. 18, No. 2, pp. 127-147, May 2008.

[16] H. Wei, S.Billings and J. Liu, "Time-varying parametric modelling and time-dependent spectral characterisation with applications to EEG signals using multiwavelets", *International Journal of Modelling, Identification and Control*, vol. 9, No. 3, pp. 215-224,2010.

[17] X. Xu, Z.Y. Shi and Q. You, "Identification of linear time-varying systems using a wavelet-based state-space method", *Mechanical Systems and Signal Processing*,doi:10.1016/j.ymssp.2011.07.005.

[18] Z. Lua, O. Gueganb, "Estimation of Time-Varying Long Memory Parameter Using Wavelet Method", *Communications in Statistics - Simulation and Computation*, vol. 40, No. 4, pp. 596-613, March 2011.

[19] M. Gokhale1 and D. Khanduja, "Time Domain Signal Analysis Using Wavelet Packet Decomposition Approach", *Int. J. Communications, Network and System Sciences*, doi:10.4236/ijcns.2010.33041.

[20] Guangyu Wang, Zufan Zhang, and Qianbin Chen, "Analysis and Properties of Time-Varying Modified DFT Filter Banks," *EURASIP Journal on Advances in Signal Processing*, vol. 2010, Article ID 342865, 15 pages, 2010. doi:10.1155/2010/342865.

[21] G. Wang, Q. Chen and Z. Ren, "Modelling of time-varying discrete-time systems", *IET Signal Processing*, vol. 5, No. 1, pp104-112, Feb. 2011.

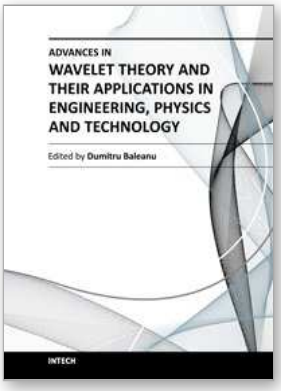

Advances in Wavelet Theory and Their Applications in Engineering, Physics and Technology

Edited by Dr. Dumitru Baleanu

ISBN 978-953-51-0494-0
Hard cover, 634 pages
Publisher InTech
Published online 04, April, 2012
Published in print edition April, 2012

The use of the wavelet transform to analyze the behaviour of the complex systems from various fields started to be widely recognized and applied successfully during the last few decades. In this book some advances in wavelet theory and their applications in engineering, physics and technology are presented. The applications were carefully selected and grouped in five main sections - Signal Processing, Electrical Systems, Fault Diagnosis and Monitoring, Image Processing and Applications in Engineering. One of the key features of this book is that the wavelet concepts have been described from a point of view that is familiar to researchers from various branches of science and engineering. The content of the book is accessible to a large number of readers.

How to reference

In order to correctly reference this scholarly work, feel free to copy and paste the following:

Guangyu Wang, Qianbin Chen and Zufan Zhang (2012). Time-Varying Discrete-Time Wavelet Transforms, Advances in Wavelet Theory and Their Applications in Engineering, Physics and Technology, Dr. Dumitru Baleanu (Ed.), ISBN: 978-953-51-0494-0, InTech, Available from: http://www.intechopen.com/books/advances-in-wavelet-theory-and-their-applications-in-engineering-physics-and-technology/time-varying-discrete-time-wavelet-transforms

INTECH
open science | open minds

InTech Europe
University Campus STeP Ri
Slavka Krautzeka 83/A
51000 Rijeka, Croatia
Phone: +385 (51) 770 447
Fax: +385 (51) 686 166
www.intechopen.com

InTech China
Unit 405, Office Block, Hotel Equatorial Shanghai
No.65, Yan An Road (West), Shanghai, 200040, China
中国上海市延安西路65号上海国际贵都大饭店办公楼405单元
Phone: +86-21-62489820
Fax: +86-21-62489821