1

Potential Risk: A New Approach

Handerson J. Dourado Leite and Marcus V. Teixeira Navarro
Federal Institute of Education, Science and Technology of Bahia
Brazil

1. Introduction

Risk is a polysemic term that has been transformed throughout the historical process, but has always been associated to the idea of predicting an unwanted future event.

The first rudimentary notion of what can be called risk, may have arisen, according to Covello and Munpower (1985), around 3200 BC in the valley between the Tigris and Euphrates Rivers, where lived a group called "*Asipu*". A major function of this group was to help people who needed to make difficult decisions. The "*Asipus*", when sought, identified the scale of the problem, the alternatives and the consequences of each alternative. Then, they drew up a table, marking the positive and negative points of each alternative to indicate the best decision.

With the great voyages in the fifteenth century it became necessary to evaluate the damage caused by the potential loss of ships. Emerges then the term risk, with connotations similar to what is meant today, but the understanding of its causes was related to accidents and, therefore, impossible to predict. The development of classical probability theory, in the mid-seventeenth century, to solve problems related to gambling, allowed the start of the process of quantifying the risks, but the causes were still credited to chance.

Only from the nineteenth century, associated with the dominant thinking of the primacy of science and technique and propelled, among other factors, by the discoveries of Pasteur, emerged the association of risk with prevention, i.e., if the causes are known and quantified one can predict the undesirable effects.

The advent of modernity has produced and incorporated to the human way of life a variety of technologies and the risk became the distinguishing feature of this generated complexity. More and more, the sources of hazards[1] were associated with daily social practices. In today's society, it is difficult to separate the manmade dangers of the "natural" dangers (Beck, 2003). A flood for example, that occurred as a completely spontaneous phenomenon, today can happen as a consequence of human action on nature. This new concept that the term risk assumes defies the human prediction capacity and rationality, because its causes are no longer accidental and the causes are not always known, or they are possible effects of the technologies generated by man himself.

[1] Hazards are "physical, chemical or biological agents or a set of conditions that present a source of risk." (Kolluru, 1996. p. 3-41).

2. Risk and probability

The first report of a quantitative risk evaluation applied to health goes back to Laplace, in the late eighteenth century, which calculated the probability of death among people with and without vaccination for smallpox. With Pasteur's studies in the late nineteenth century, it was possible to use the tools of statistics to evaluate the factors related to communicable diseases, giving birth to the concept of epidemiological risk (Covello; Munpower, 1985, Czeresnia, 2004).

Epidemiological studies about contagious diseases have two very specific characteristics. The first refers to the object, which is only a source of damage. The second relates to the goals, which aim to determine the relationship between cause and effect, i.e., between exposure and disease. So, even with multifactorial determinants, it's an unidimensional evaluation. Therefore, in a evaluation between exposed and unexposed, the concept of risk approaches the definition of probability. However, when the objective includes the judgment about the severity of the injury or the comparison of different injuries in different exposures, the probability becomes one of the information that compose the concept of risk.

Therefore, the development of probability enabled the start of the process of quantifying risk. However, it's noteworthy that probability and risk are different concepts to most subjects. While the probability it's mathematically defined as the possibility or chance of a particular event occurs, and is represented by a number between 0 and 1 (Gelman; Nolan, 2004, Triola, 2005), the risk is associated with the probability of occurrence of an undesired event and its severity and cannot be represented by only one number.

If two events A and B have, respectively, 0.10 and 0.90 probability of occurring, the event B is classified as nine times more likely to occur than the event A. However, one can not say that the event B has a greater risk that the event A. For the concept of risk, is fundamental to know how much the event will be harmful. The evaluation of the probabilities of occurrence of the events A and B is done purely with mathematical analysis, while the risk assessment requires judgment of values. Thus, all observers will agree that the event B is more likely to happen than the event A, but not all should agree on which event represents a greater risk, knowing, or not, the damage.

As already explained, the notion of risk has been transformed throughout human history, it being understood nowadays as a theoretical elaboration that is historically constructed in order to mediate the relationship between man and the hazards, in order to minimize losses and maximize the benefits. Thus, it is not a greatness that is in nature to be measured, is not independent of the observer and his interests. It is formulated and evaluated within a political-economical-social context, having a multidimensional and multifactorial character (Fischhoff et al., 1983, Covello; Munpower, 1985, Beck, 2003, Hampel, 2006)

3. The risk in the modern era

The beginning of the twentieth century was marked by great scientific advances. The application of this knowledge produced new technologies such as X-rays, nuclear energy, asbestos and formaldehydes. The rapid use of these technologies as if they were only sources of benefits brought consequences to public health and to the environment, which only came to be perceived and understood by society, from the 70s of the last century. The disclosure of these risks led to pressures on governments, to control occupational,

environmental, chemical agents and radioactive agents risks. In this context of large social movements, the need for State intervention was strengthened, in order to regulate the use of products potentially harmful to health and the environment (National Research Council, 1983, Lippmann; Cohen; Schlesinger, 2003, Omenn; Faustman, 2005)

The regulation of health risks is understood as a government interference in the market or in social processes, in order to control potentially damaging consequences to health (Hood; Rothstein; Baldwin, 2004). The model of the regulatory system, deployed in each country depends on political, economic and social conjunctures. Therefore, in the 1970s, while European countries exerted, initially, its regulatory power, by means of direct administration bodies of the State, the United States exercised this power, mainly, through independent and specialized agencies.

Currently, most European Union countries use the model of regulatory agencies (Lucchese, 2001). In Brazil, this role it's exercised in a hybrid way, because the National System of Sanitary Surveillance (*Sistema Nacional de Vigilância Sanitária* - SNVS) is composed of a regulatory agency in the federal sphere, the National Health Surveillance Agency (*Agência Nacional de Vigilância Sanitária* – ANVISA), but in most states and municipalities the regulation is exerted by direct administration.

The new technologies permeate the entire society and, therefore, influence and change the established social relations. These technologies are characterized by having intrinsic risks, by the possibility of adding new risks throughout their life cycle and by the incomplete scientific knowledge about the types of risks they generate and their interactions in different situations. Thus, the regulatory process occurs, in most cases, in situations of epistemic uncertainty, where risk factors are presented in a diffuse way, requiring from sanitary surveillance the use of mutually complementary strategies of health protection.

As for the economic and social consequences related to the decisions of regulatory actions were amplified by the globalization process, as many decisions go beyond national borders and bring into play great interests. The first regulatory decisions showed that the process of definition and regulation of risk is an exercise of power, full of interests and political, economical, and social concepts, and can strongly influence the allocation of public and private resources of a nation (Slovic, 2000, Fischhoff; Bostrum e Quadrel, 2005).

Thus, the risk conceived as the probability of occurrence of an undesired event, calculated by specialists and presented to society as an absolute and neutral truth, began to be questioned. The conflicts of interest over the division of risk showed that it is not possible to separate the technical analysis about the risks from the decisions of who should be protected, from the costs and from the available alternatives, because the studies or risk evaluations occur, necessarily, to subsidize decision-making.

4. Other dimensions of risk

The fact that the calculation of risks undertaken by experts no longer represented the absolute truth and, also, the impossibility to eliminate the risks produced by the new technologies, because the benefits would also be suppressed, bring up new angles for the analysis of the phenomenon. Therefore, come into play other dimensions of risk as acceptability, perception and confidence in the regulatory system.

In beginning of the 1980, the U.S. Congress, realizing the need to structure a model of risk assessment that had wide acceptance, as well as standardizing the realization of studies in various areas, established a directive that designated the Food and Drug Administration (FDA) as responsible in coordinating a study for the harmonization. The FDA commissioned the National Academy of Sciences of the United States, which developed the project, whose results were of notorious and acknowledged importance, structuring the foundation for the paradigm of risk regulation (National Research Council, 1983, Omenn, Faustman, 2005).

This study, published in 1983 under the title *Risk assessment in the government: managing the process*, known internationally as the *Red Book*, establishes a process with seven stages: (1) Hazard identification, (2) dose x response assessment, (3) exposure assessment, (4) risk characterization; (5) Establishment of regulatory options, (6) Decision and implementation of the option of regulation, (7) Evaluation of the regulation. All steps occur with the participation of various actors, experts or not. The stages (1 to 4) are classified as risk assessment and are of technical and scientifically base. The other stages (5 to 7) are part of risk management, which, taking into account the information obtained in the first stage, evaluate and implement the best regulatory options, considering economical, political and social issues.

A diagram of the paradigm of risks applied to the area of health surveillance is represented in Figure 1.

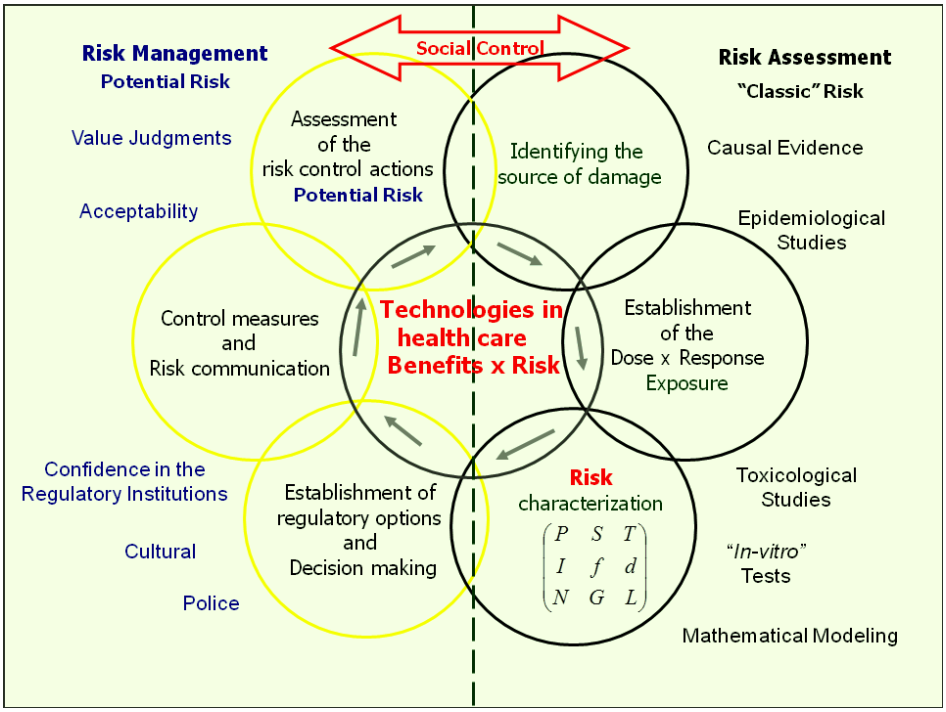

Fig. 1. Diagram of the paradigm of risks applied to the area of health surveillance. Adapted Omenn and Faustman (2005, p. 1084)

In the center of the map is the information that characterizes the particularization of the model for the health surveillance: the object of study. Objects of action of health surveillance, herein referred to as technologies in health care, have three basic characteristics: they are of interest to health, produce benefits and have intrinsic risks. It is these characteristics that justify the action of health surveillance about the technologies for health.

In this triad, the risk is a feature that mobilizes a wide set of control strategies. As the risk is intrinsic to the object, it cannot be eliminated without eliminating the object, it can only be minimized. All technologies for health present some kind of risk and, if there is any that does not possess risks, it probably will not be object of action of the sanitary surveillance.

For possessing risks inherent in their nature, the technologies should be used in the observance of the bioethical principle of the benefit (Costa, 2003, 2004)

The diagram of the paradigm of risk, represented in Figure 1, is divided in half, pierced by social control and the object of study. The right side represents the field of risk assessment and the left side, the field of risk management. Risk assessment is the use of objective evidences to define the effects on health due to exposure of individuals or populations to hazardous materials or situations. Risk management refers to the process of integrating the results of risk assessment with social, economical and political issues, weighing the alternatives and selecting the most appropriate to the regulatory action (National Research Council, 1983).

Risk assessment consists of three steps: identifying the source of damage, establishment of the dose x response and risk characterization. Risk identification is basically the answer to the question: which component of this health technology causes an adverse event? It is a question that can be answered based on causal, toxicological, and epidemiological evidence or in vitro tests (National Research Council, 1983, Omenn; Faustman, 2005).

In the second stage, two questions must be answered: how exposures occur? How is the relationship between exposure x effects (dose x response)? At this point, should be evaluated the conditions (intensity, frequency, duration, susceptibility and exposure period), in which the individuals or the populations are exposed. The second question should be answered with epidemiological, toxicological, experimental, and in vitro studies, using extrapolations or mathematical modeling, to establish the probability of occurrence (National Research Council, 1983, Omenn; Faustman, 2005).

The last step is the characterization of the risk, in the classic sense. It is a moment of synthesis, when setting the damage likely to occur and its probability (P) the severity of the damage (D), the lifetime lost (T) and the vulnerabilities of exposure, as the intensity of exposure (I), the frequency of exposure (F), the duration of exposure (D), the exposed population (N), the populational groups (G) and the accessibility to the geographical location of the population (L).

The risk assessment is a moment eminently technical and scientific, in which the theoretical models, the experimental procedures and the validation of the results are the elements of the performed studies (epidemiological, toxicological, in vitro and mathematical modeling, among others), so they can have rigor and scientific legitimacy. However, the evaluation models are not independent of the observers and their objectives (Czeresnia, 2004).

Risk assessment is not always possible to be performed quantitatively. In the case of the ionizing radiations, for example, the studied populations (Hiroshima and Nagasaki, Chernobyl and radiotherapy patients) were exposed to high doses, with high dose rates. Thus, it was necessary the use of the precautionary principle to postulate that, by extrapolation of the results of exposure at high doses, one must consider the linear relationship dose x response, without a threshold of exposure. Similar situations also occur in exposures to other physical and chemical elements, reflecting the complexity of the processes of risk assessment.

Based on information from the risk assessment, begins the process of management, conducted by the regulatory authority, also composed of three steps: establishment of regulatory options and decision making; implementation of control measures and risk communication and; assessment of the control actions.

In the first stage, are raised the possible actions that can minimize the risks, when the political-economical-cultural viability of each of the actions should be evaluated. Generally, there are several possibilities of regulation, when the best should be chosen. The best option is not, necessarily, the one with lowest risk or the one you want, it's the possible option in the evaluated context. The result of the value judgments will be the establishment of the limits of acceptability and of the control activities needed to keep the risks within these limits (National Research Council, 1983, Omenn; Faustman, 2005). In the case of the sanitary surveillance, this is the moment of development and publication of the standards for sanitary regulation.

The next step is the moment to inform society about the risks being regulated and the control measures being implemented. Parallel to the communication process, the regulatory authority should take the necessary measures, so that the control measures are effectively fulfilled by the regulated segment. An autonomous regulatory authority, with financial resources and skilled technicians, is a sine qua non condition for the implementation of the regulatory actions. However, the tradition of the institutions, of the regulated segment and of the society is essential so that risk control actions cease to be just rules and start to be practiced (National Research Council, 1983, Omenn; Faustman, 2005).

The last step is the evaluation of the entire process. It's the end of the first cycle and, perhaps, demands the beginning of a new cycle of risk assessment and management. To carry out the assessment, understood as a trial on a social practice or any of its components, in order to assist in decision-making, it is necessary to formulate strategies, select approaches, criteria, indicators and standards (Vieira Da Silva, 2005).

5. The potential risk

As seen so far, risk is a theoretical construct, historically grounded and, by the characteristics with which it presents itself in modern times, requires a regulatory system focused on protecting the health, due to the attributes that present the new technologies.

In the presented model of regulation of risks, the risk, in the classical sense, no longer has the central role, when passing from evaluation to management. In the process of risk management, the actions of health surveillance are focused, in general, on the control of risks and on the source of risks. In risk evaluation, the hazard is identified, related to the

damages and its consequences, thus risk is characterized. In risk management, the forms of control are identified, implemented and evaluated; thus control is characterized.

The sanitary standards generally do not regulate the action of chemical, physical or biological substances, they regulate actions, procedures, products and equipments that must be used, so that the technologies for health may produce the maximum of benefit with the minimum of risk, considering the scientific, ethical, economical, political and social issues.

The control actions are not related, necessarily, to the sources of risks. They may be related to conditions of the environment, of procedures, of human resources or of management of the own system of risk management. Since actions of health surveillance are focused, generally, on the control of risks and not on the risks itself, it becomes difficult the establishment of the cause-effect relationship.

The sanitary license, for example, is an operating concept that instrumentate the sanitary surveillance to control risk, but that is not directly related to any source of risk. A health service working without a sanitary license poses a risk to the system control, but may not represent a risk in the classical sense. One can not say what are the damages that may occur and in which probability. Even because the service can be fulfilling all technical and safety requirements. However, the absence of the license represents an unacceptable potential risk situation for the system control. Similar reasoning can be used to evaluate the equipment registration, the professional certification, among others.

The luminosity of the view box, used to view radiographic images, is another good example. The inadequate luminosity of the view box, despite not causing any direct harm to the patient, can hide radiological information and cause a misdiagnosis. In order to display the different tones of gray, in a radiography with optical density between 0.5 and 2.2, you need a view box with luminance between 2000 and 4000 nit[2]. So, what is the risk of using a view box with a luminance of 500 nit?

There are so many variables involved that the question becomes difficult to answer. The possibility of error or loss of diagnostic information, for example, cannot be understood as a harm to the patient. The damage will be done when the decision making of the medical procedure, based on incorrect or incomplete diagnostic information, is made effective. Thus, one cannot determine the damage that will be caused and what are the probabilities of occurrence. One cannot say, even, that damage will occur. However, it is an unacceptable potentially hazardous situation, as is known to the minimum necessary light in a view box, to produce a reliable diagnosis condition.

The potential risk concerns the possibility of an injury to health, without necessarily describing the injury and its probability of occurrence. It is an concept that expresses a value judgment about a potential exposure to a possible risk. It is as if it represents the risk of the risk.

It is observed that the potential risk passes to present itself as a possibility of occurrence, or an expectation of the unexpected, therefore, it's related with possibility and not with probability. This difference is crucial to be able to clarify the proposed concept, after all, the probable is a category of the possible, that is, something is only probable if it's possible,

[2] The unit of luminance in the International System is the cd/m2, known as nit.

because if it's impossible, you cannot talk about probable or improbable. This condition of potential risk demonstrates its anteriority in relation to the classic risk. In the examples above, one can not calculate the probability of a damaging event for the lack of sanitary license or the low luminosity of the negatoscope, but, given what is known, there are chances that harmful events may occur due to these conditions.

Another important feature of the concept of potential risk refers to the temporal dimension of causal relationships. While the classic risk has its evaluation basis in occurred events, the potential risk has its causal evaluation foundations in the events that are occurring and the effects that may, or may not, occur in the future. Thus, allows work with the temporal dimension of risk facing the future or for a meta-reality and not for the past.

It is also possible to differentiate the potential risk from the classical risk according to the strategies used in the public health practices. These strategies can be divided into three great groups: health promotion in the restricted sense, health prevention (of risks or damages) and health protection.

In the practices of health promotion, strategies are aimed at capacity building and at raising awareness of the groups, so that they can take action to improve the quality of life and health, without being directed to a disease or injury whatsoever. They are actions of an educational nature which are not related to one or another specific risk factor (Almeida Filho, 2008). Thus, as their strategies do not involve specific risk factors, remains to discuss the concept of risk involving the two other strategies.

Regarding the preventive health strategy, the search for the determinants or the risk factors of a disease or of a specific aggravation on temporally and spatially defined individuals characterize their actions.In other words, are destined to act on these factors in order to reduce or eliminate new occurrences in the collective.It starts from "the assumption of recurrence of events in series, implying in an expectation of stability of the patterns of serial occurrence of the epidemiological facts" (Almeida Filho, 2000). As the action is given according to specific risk factors, ie, is related to the known behavior of the cause (risk factor) according to the probability of occurrence of the unwanted effect, the classical concept of risk seems to be the most appropriate.

On the other hand, health protection is intended to strengthen the individual defenses, therefore, is not always directed to known causes and specific risks, or relate to the referred events in series. They are used, in most cases, when there is an epistemic uncertainty, ie, when it’s unknown or there is little information about the problem to be resolved or a decision to make. So, in the case of the health protection strategies, the central element in risk management is the potential risk that, despite not, necessarily, representing a defined relationship of cause and effect, can be quantified and classified into levels of acceptability, as will be discussed further, becoming an important operational concept of the sanitary surveillance.

However, the potential risk, as well as the classic risk, cannot be represented in most scientific fields by only a number. It should be understood and evaluated within a context and with limits of acceptability established by the technical and social determinants. Therefore, the evaluations made by regulatory authorities in the process of risk management have as indicators, in most cases, the tools of risk control and, as consequence, a measure of potential risk, which will indicate whether the control conditions are acceptable or not.

6. Strategy for operationalization of potential risk

The operationalization of the concept of potential risk has implications for the sanitary surveillance, because the quantification, classification and definition of acceptability levels of these risks will permit the monitoring and comparison of several objects under the control of the sanitary surveillance, such as, the health services.

A strategy to operationalize this concept is to establish a mathematical function that relates potential risk with risk control indicators. These control indicators are present in the rules, ie, are the characteristics associated with equipments, procedures, health services etc., that should be controlled within the pre-established parameters.

The control indicators represent elements that, in most cases, you do not know the probability of generation of harmful effects, but, if outside of the pre-established parameters, there is a possibility that a harmful event may occur. Therefore, there is a causal relationship between indicators of control and potential risk, where both are inversely proportional, ie, the closer to the predetermined values are the control indicator, the lower the potential risk and vice versa.

Having identified the causal relationship it's possible to establish mathematical formulations that describe the behavior of these relationships, through the traditional mathematical formalism or using new theoretical contributions to the theory of fuzzy sets which together with the theories of evidence and of possibility, constitute a new field of study that aims at the treatment of epistemic uncertainties within the possibilities, as will be shown below.

6.1 A fuzzy logic system to evaluate potential risk

The theory of fuzzy sets, developed by Zadeh (1965), was born from the observation that in the real world certain objects or beings, such as the bacteria, are ambiguous as to which class they belong to, ie, have characteristics of animals and also vegetables. The observation of this ambiguity has led to the thought that there is no precision in the limits of a set and thus, it is possible to establish degrees of belonging of an element X, whatever, to a certain set. Taking as an example the bacteria, the number of animals characteristics that they exhibit allows us to establish a degree of belonging to the set of the animals, as well as, the amount of plant characteristics allows us to establish another degree of belonging to the set of the vegetables.This way, although they have a higher number of features of one kind or another, the bacterium does not cease to belong to both, though with different degrees of belonging.

However, in the analysis of the ambiguities present in most of the everyday phenomena, is not always possible to quantify the characteristics of an element with precision to determine its degree of belonging. In most cases, these characteristics are presented in the form of uncertainties. To solve this problem, the modeling of the uncertainties uses the natural language (ordinary) and the membership functions express the possible values between 0 and 1, which each natural term may take. (Weber,2003).

As in natural language are used variables or linguistic terms, also called inaccurate quantifiers , of common use in everyday life, but definers of many decisions, such as, "low," "high," "good," "very good"," tolerable "and so on. The membership functions consist of the association of each linguistic variable to a standard curve of possibilities (Shaw; Simões, 1999), which will define the membership degrees between 0 and 1, that the linguistic variable may assume.

Zadeh (1965) developed operators for the *fuzzy* sets, enabling the establishment of relationships between them, being the most important the operations of maximum (max) and minimum (min), which can be easily understood if defined, respectively, as union and intersection in the classical set theory.

A fuzzy logic system (FLS), in a simplified manner, consists of performing logical operations with several fuzzy linguistic variables, in order to obtain a single value that represents the result of the performed operations.

To build an FLS, the first step consists of the definition of the input and output variables of the FLS, depending on the problem you want solved. When you want to, for example, know what is the potential risk indicator of biological contamination of the water for dialysis in the realization of the hemodialysis procedure; the output variable of the FLS may already be defined as the potential risk indicator of biological contamination of the water for dialysis (PRI-BCW)

To establish the input variables, the first question to be answered is: what are the possible causes to make water for dialysis potentially dangerous for biological contamination? Loosely, we can say that there are four causes: 1) Inadequacy of the drinking water treatment; 2) Inadequacy of the water treatment for dialysis; 3) Lack of knowledge or error of an employee who performs the procedure of water treatment for dialysis and 4) Inadequacy on the facilities of the water treatment plant.

The second question, in an attempt to define the input variables, is: how to handle each cause defined? Consulting the existing regulations for dialysis services in Brazil, you can display at least one control point for each defined cause, as described in Table 1.

Cause	Control point
Inadequacy of the drinking water treatment.	Adequacy of the procedure for drinking water treatment, according to the Ordinance MS nº 518/2004 4
Inadequacy of the water treatment for dialysis.	Adequacy of the execution of the procedure of water treatment for dialysis, according to the RDC nº 154/2004 5
Lack of knowledge or error of an employee who performs the procedure of water treatment for dialysis.	Adequacy of the capacity of an employee who performs the procedure of water treatment for dialysis.
Inadequacy on the facilities of the water treatment plant.	Adequacy of the constructive aspects and of the equipment used in the water treatment plant, according to the RDC nº 154/2004 5

Table 1. Relationship between possible causes and control points of the possibility of biological contamination of the water for dialysis.

Established the control points of the four possible causes, it is up to define which input variables of the FLS will be the results of the verification of the level of control of the set points. This level of control is called control indicator (CI) and shall be established by an observer, such as, a public health professional with expertise to make a subjective evaluation of each item, and may be defined, therefore, for a *fuzzy* linguistic variable, or inaccurate quantifier.

Defined the input and output variables of the FLS, it is necessary to establish the universe of discourse of each of them, ie, the variation range of the fuzzy linguistic variables of input and output. The universe of discourse limits the possible evaluations that the observer can present. As is the case of the input variables of the FLS, it is to check its adequacy, we will use the universe of discourse in terms of: Inadequate (IND), Shortly Adequate (SAD), Tolerable (TOL), Adequate (ADQ) and Very Adequate (VAD).

For the output variable of the FLS, since it is an indicator of potential risk, the universe of discourse adopted will be: Very Low (VL), Low (L), Medium (M), High (H) and Very High (VH). Note that in all cases the universe of discourse consists of 5 variables to allow good accuracy, since the greater the number of possibilities is, the better the accuracy of the evaluator.

The next step will be to define the logical operations that must be made in the FLS so that, from the input variables, it can be obtained the potential risk indicator of biological contamination of the water for dialysis (PRI-BCW) in the output. Being the four input variables of the type, verification of the "level of adequacy", and as the output variable should represent an indicator of potential risk, two questions must be evaluated: which operations should be performed between the four input variables? and what is the relationship between control indicator (CI) and potential risk indicator (PRI)?

The operation between the input variables of the FLS should be held so that it is possible to obtain a single value, ie, a value that represents the level of control of all input variables (control indicator), ie, an indicator of aggregate control. Therefore, this must be one of the logical operations to be performed.

The control indicators represent the level of control found by the observer and the 'potential risk' is the output of the FLS. Thus, the indicator of potential risk is inversely proportional to the control indicator, since the greater the observed control indicator, the lower the potential risk and vice versa. So, this will be another operation to perform

To perform these operations, will be used *fuzzy* logic controllers. A *fuzzy* logic controller is a device that performs logical operations between *fuzzy* linguistic variables in its three stages: fuzzification, *fuzzy* inference and defuzzification. In this case, you need to build two types of *fuzzy* logic controllers, one for each type of operation you need to perform.

For each of the *fuzzy* controllers, it is necessary to develop the three steps referred above (fuzzification, *fuzzy* inference and defuzzification); therefore, it will be demonstrated, initially, the operation between the input variables of the FLS, known only as input controller. Each controller must perform only the operation between two input variables, so there is no explosion of rules, as will be explained later.

Fuzzification means the process of transforming the possible existing information into *fuzzy* elements; consists in identifying the linguistic variables of input and output that you want to operate, defining the universe of discourse and the membership functions for each variable, based on the experience and on the nature of the process being fuzzified.

To perform the fuzzification of the input controller, some steps have been taken, as the identification of the input linguistic variables and the establishment of the universe of discourse (Inadequate – IND, Shortly Adequate – SAD, Tolerable – TOL, Adequate – ADQ and Very Adequate – VAD). However, it lacks defining the output variable and the universe of discourse for this controller, because, as has been identified, it will be required more than one logical operation between the *fuzzy* variables, the output of this input controller, will not, necessarily, be equal to the output variable of the FLS. Thus, considering that the objective of this controller is to aggregate the control indicators (CI) pointed by the observer and thinking about the future composition of the organization of the FLS, it was decided, in the example shown, to define the universe of discourse of the output variable as: Very Low (VL), Low (L), Medium (M), High (H) and Very High (VH).

The last step to accomplish the process of fuzzification is to define the membership function for each identified *fuzzy* linguistic variable. In this case, we took the function of trapezoidal and symmetrical shape for all the input controller's *fuzzy* linguistic variables, as can be seen in Figure 2.

A membership function defines the degree of belonging or membership of each *fuzzy* linguistic value, ie, it represents the curve of possibilities of the behavior of the *fuzzy* linguistic variable (Weber, 2003). Note that the membership functions are standard functions, ie, in its ordinate axis (Y) it only admits *fuzzy* values from '0 'to '1', ie, it goes from the not belonging (0%) to the total belonging (100%). In the abscissa axis (X) the values depend on the problem addressed; in this case, we used '0 'to '1', because those are variables that assume this behavior (potential risk and control indicator).

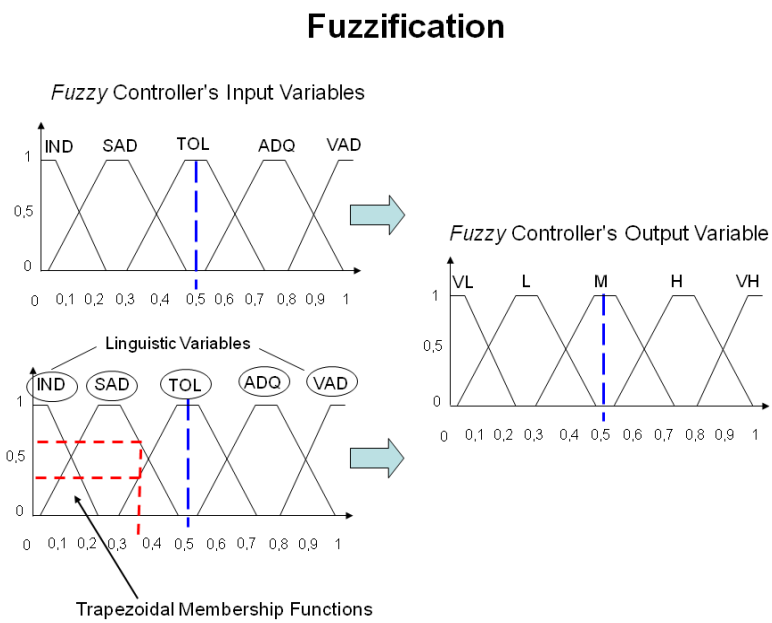

Fig. 2. Input controller's input and output membership functions

It is also important to point out, in Figure 2, that each *fuzzy* linguistic variable was associated with a numerical value 0%; 25%, 50%, 75% and 100%, respectively. This fact can be identified, by observing that the top of the trapezoids corresponds to one of these values. So, if the point 0.5 is taken (50%), in the X-axis (blue dotted line), it will correspond to the center of the trapezoid for the *fuzzy* linguistic variables 'Tolerable', in the input and 'Medium', in the output.

We opted for the trapezoidal shape because it was recognized that in the observation made there is no accuracy of values; when reporting, for example, that a level of control is 'shortly adequate', this does not correspond exactly to 25% but to a range for that value. Now the option for the symmetry was made as it was considered that there are an equal number of chances of the observer to choose for any of the *fuzzy* linguistic variables that compose the universe of discourse.

The importance of fuzzification can be understood, when we take a value, for example, 0.35 in the abscissa axis (red line), note that this value has a degree of membership greater than 50% for 'shortly adequate' and less than 50% for 'tolerable'. These membership differences will generate the sets that will be operationalized.

Completed the process of fuzzification, it is necessary to perform the *fuzzy* inference process. The *fuzzy* inference process consists in the processing of the *fuzzy* variables according to specific rules. There are basically two methods, the Mamdani model and the Takagi-Sugeno-Kang model (Shaw; Simões, 2005). Mamdani's method is the most used and recommended for the treatment with inaccurate information. It is based on the elaboration of rules of the 'IF' <condition>; 'THEN' <consequence> type, using the heuristic method. The rules are the knowledge bases, from which, an "inference machine" (*software* or *hardware*) acts and performs operations of minimum (intersection) between the input *fuzzy* linguistic variables of each rule, and of maximum (union) between the results obtained by the previous operation.

A rule of the 'IF' <condition>; 'THEN' <consequence> type is a simple logic rule and it means that for a given situation, 'IF' a condition is met, even partially, 'THEN', a consequence will occur. For example, when one states that the potential risk is inversely proportional to the level of control, it is possible to say that 'IF' the level of control is high, 'THEN' the potential risk is low. When two variables (two conditions) are associated, using the Mamdani method, we use the operator 'AND' between the two variables to indicate that an operation will take place between them. This way, the rule is now stated as: 'IF' a condition is met, even partially 'AND' other condition is also met, even partially, 'THEN', some consequence will occur. This way, using the heuristic method was constructed the rules base for *fuzzy* logic controller input, shown in Table 2.

It will be required the construction of twenty-five rules, because for two variables per controller and five fuzzy linguistic variables, one needs, therefore, twenty-five combinations (5^2).

It should be noted, also, that in Table 2 the input variables were treated generically as 'Adequacy 1' and 'Adequacy 2', because it will be necessary to use more than one input controller, since there are four input variables. So, you can use the same set of rules for both controllers.

The 'inference machine' is a *software* or *hardware* that performs logic operations based on defined rules.

Rules	IF	Condition	AND	Condition	THEN	Condition
1	‘Adequacy 1’	VAD	‘Adequacy 2’	VAD	'Control'	VH
2	‘Adequacy 1’	VAD	‘Adequacy 2’	ADQ	‘Control’	VH
3	‘Adequacy 1’	VAD	‘Adequacy 2’	TOL	‘Control’	M
4	‘Adequacy 1’	VAD	‘Adequacy 2’	SAD	‘Control’	L
5	‘Adequacy 1’	VAD	‘Adequacy 2’	IND	‘Control’	L
6	‘Adequacy 1’	ADQ	‘Adequacy 2’	VAD	‘Control’	VH
7	‘Adequacy 1’	ADQ	‘Adequacy 2’	ADQ	‘Control’	H
8	‘Adequacy 1’	ADQ	‘Adequacy 2’	TOL	‘Control’	M
9	‘Adequacy 1’	ADQ	‘Adequacy 2’	SAD	‘Control’	L
10	‘Adequacy 1’	ADQ	‘Adequacy 2’	IND	‘Control’	L
11	‘Adequacy 1’	TOL	‘Adequacy 2’	VAD	‘Control’	M
12	‘Adequacy 1’	TOL	‘Adequacy 2’	ADQ	‘Control’	M
13	‘Adequacy 1’	TOL	‘Adequacy 2’	TOL	‘Control’	M
14	‘Adequacy 1’	TOL	‘Adequacy 2’	SAD	‘Control’	L
15	‘Adequacy 1’	TOL	‘Adequacy 2’	IND	‘Control’	VL
16	‘Adequacy 1’	SAD	‘Adequacy 2’	VAD	‘Control’	L
17	‘Adequacy 1’	SAD	‘Adequacy 2’	ADQ	‘Control’	L
18	‘Adequacy 1’	SAD	‘Adequacy 2’	TOL	‘Control’	L
19	‘Adequacy 1’	SAD	‘Adequacy 2’	SAD	‘Control’	VL
20	‘Adequacy 1’	SAD	‘Adequacy 2’	IND	‘Control’	VL
21	‘Adequacy 1’	IND	‘Adequacy 2’	VAD	‘Control’	L
22	‘Adequacy 1’	IND	‘Adequacy 2’	ADQ	‘Control’	L
23	‘Adequacy 1’	IND	‘Adequacy 2’	TOL	‘Control’	VL
24	‘Adequacy 1’	IND	‘Adequacy 2’	SAD	‘Control’	VL
25	‘Adequacy 1’	IND	‘Adequacy 2’	IND	‘Control’	VL

(Inadequate (IND), Shortly Adequate (SAD), Tolerable (TOL), Adequate (ADQ), Very Adequate (VAD), Very Low (VL), Low (L), Medium (M), High (H) and Very High (VH)).

Table 2. Rules ‘IF’...’THEN’ for *fuzzy* input controller

As shown in the example above, when it was shown the importance of fuzzification, when defining a control indicator for an input variable, it will be associated with a number that will produce different degrees of membership for each membership function and, at every point where it intercepts the membership function, it will generate *fuzzy* sets. In the *fuzzy* inference it is verified if there is a point of interception for all defined rules 'IF', 'THEN'. Among the sets generated in each variable and in each rule, it is performed an operation of minimum (intersection) that corresponds to the operator 'AND'. Among the resulting sets from the operation of minimum of every rule, it is performed an operation of maximum (union), coming to a set representing the results of the performed *fuzzy* operations.

In Figure 3, it is shown what happens in the process of *fuzzy* inference. It was assigned to the ‘adequacy of the procedure for drinking water treatment’ (ADWT) a control indicator ‘Tolerable’ (0.5) and to the ‘adequacy of the procedure of water treatment for dialysis’

(AWTD), a control indicator 'Adequate' (0.75). The red lines represent the values assigned to each input variable and the yellow forms, the set generated in each rule. Note that operations of minimum (intersection) are performed between the yellow sets of each rule, generating as results the blue sets. Among the blue sets, an operation of maximum (union) is performed, resulting in the set surrounded by a red line, representing the *fuzzy* result.

The defuzzification process is translated into the transformation of the *fuzzy* set resulting in a discrete value, seeking to define the value that best represents the distribution of possibilities present in the output variable. The three most used methods for defuzzification are the center of area (C-O-A), the center of maximum (C-O-M) and the mean of maximum (M-O-M). The C-O-A method calculates the centroid of the area obtained in the output, or the point that divides this area in half, after the max-min operations performed on *fuzzy* inference. The C-O-M method calculates a weighted average of the maximum values present in the exit area, which weights are the results of *fuzzy* inference, the area itself has no influence on the outcome. Finally, the M-O-M method, used in this work, calculates an average of the maximum values present in the exit area, disregarding the format of this area, as shown in Figure 3.

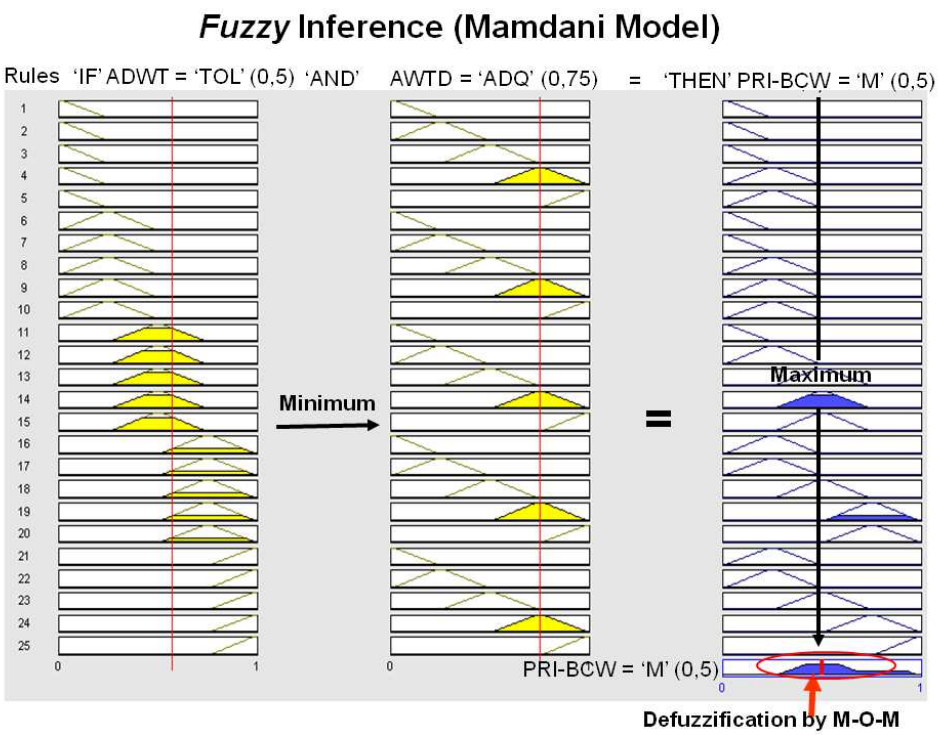

Fig. 3. The steps of fuzzy inference and defuzzification for the input controller

The second type of *fuzzy* logic controller to be built is called output controller. As can be seen in Figure 4, the input variables of this output controller will be equal to the output variables of the input controller and the output variables will be equal to the output variables of the FLS. The only difference will be the rule base 'IF'; 'THEN', but all other steps are identical to the input controller. The difference in the rule base exists, because the logical operation to be performed will be the conversion of the indicator of control for potential risk indicators that are inversely proportional. Thus, the rule base 'IF', 'THEN' was elaborated considering this criterion.

Finally, for the construction of the FLS the *fuzzy* logic controllers will be grouped so as to produce the desired information, as shown in Figure 4. To carry out the construction and operation of an FLS, the program MatLab can be used.

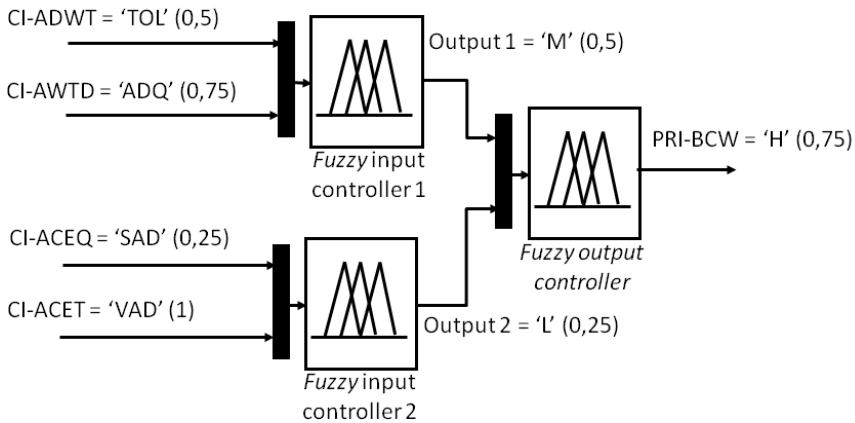

CI-ADWT = Control indicator of the adequacy of the procedure for drinking water treatment

CI-AWTD = Control indicator of the adequacy of the procedure of water treatment for dialysis

CI-ACEQ = Control indicator of the adequacy of the constructive aspects and of the equipment used in the water treatment plant

CI-ACET = Control indicator of the adequacy of the capacity of an employee who performs the procedure of water treatment for dialysis

PRI-BCW = Potential risk indicator of biological contamination of the water for dialysis

Fig. 4. Fuzzy logic system for indication of potential risk of biological contamination of the water for dialysis

Thus, as can be seen in Figure 4, when evaluating a service of dialysis a sanitary inspection team should consider the control indicators of the adequacy of the procedure for drinking water treatment (CI-ADWT), of the adequacy of the procedure of water treatment for

dialysis (CI-AWTD), of the adequacy of the constructive aspects and of the equipment used in the water treatment plant (CI-ACEQ) and of the adequacy of the capacity of an employee who performs the procedure of water treatment for dialysis (CI-ACET), respectively, 'TOL', 'ADQ', 'SAD' e 'VAD', so, the PRI-BCW of this system will be considered high (H), ie, 0.75; indicating that there is a nonconformity at some point in the process under analysis. In this case, the inadequacy of the constructive aspects of the water treatment plant and / or of the equipment used to perform the process.

6.2 O PRAM: Potential Risk Assessment Model

The formulation of the PRAM has been developed generalized so that it could be applied in any area of risk governance and possibly, also outside it.

The PRAM was validated by evaluating potential risks in radiodiagnostic services in the State of Bahia, Brazil, enabling advance, in order to better understand the specific problems and the possibilities of action of the health surveillance system, as the regulatory authority, in control of risks in radiodiagnostic.

The validation results showed that use of the PRAM model allowed going beyond simple situational description, indicating the possible explanatory factors of the health situation found. Some advantages of this approach are introduced, in comparison with other works that dealt with the theme. One of them concerns the graphical representation of the potential risk of each procedure in each of the services.

This enables the regulatory system to classify and compare the evaluated procedures, so that you can plan and direct the actions for the services whose procedures are in unacceptable or tolerable level of potential risk , establishing priorities.

Another advantage relates to the possibility of applying the principle of optimization in the risk control system, enabling the continuous evolution of the system, evaluating the historical evolution of risk management. The monitoring of time evolution can show an advance or a retreat of the potential hazard, alerting the regulatory authority before the service moves to a range of higher degree of risk, allowing risks prevention actions, by anticipating and stopping a trend.

So, the Regulatory Authority has the possibility to act in preventing the risk and not just in control. The temporal evolution can be used easily, with computational aid, to monitor the services individually or collectively.

However, using PRAM to monitor the temporal evolution of the potential risks, as well as for comparison and risk assessment, should be carried out using the same rating scales and indicators of the same ranges of acceptability. Otherwise, the PRAM loses comparability.

The PRAM needs to consider important issues of risk governance. The first question refers to the range of variation. The PRAM needs to be represented by a mathematical formalism, whose values of the potential risk - PR are always within the same range of variation, regardless of the number of indicators, and there is no possibility of taking the zero value.

The issue of the values being within the same range of variation allows the comparison and the establishment of limits of acceptability, while the not possibility of assuming the value zero is a condition of the problem, because the risks can be as small as possible, but will never be nulls.

The levels of acceptability should not have a direct border between the acceptable and the unacceptable. There should be a transition zone, where the condition of risk is tolerable in certain conditions or for some time. The levels of acceptability must permit its variation, for more or for less, allowing the application of the principle of optimization (Slovic, 2000).

On the other hand, the number of indicators should be opened, allowing the inclusion and exclusion of as many indicators as may be necessary. The indicators are classified, according to the level of potential risk they pose to the system.

The risk control indicators should be separated into two categories: critical indicators and non-critical indicators. Critical indicators are those that are associated, directly, to the unacceptable potential risk level. For its severity, they compromise the whole risk control system of the procedures. Therefore, report about critical situations, whose existence, regardless of the existence of any other, take the potential risk to the unacceptable levels.

The set of the non-critical indicators is formed by all the indicators that, individually, do not compromise, in a decisive way, the risk control system. The complete set of the non-critical indicators acts like a critical indicator, ie, if all non-critical indicators are null, the set of indicators will be null and thus, only then, will represent a critical commitment on the potential risks control system.

Once one can build as many risk indicators as needed or desired and the result must be within fixed limits, fundamental to the discussion and establishment of acceptability criteria of the potential risks, it was necessary to develop a mathematical formalism to represent the mean values of the sets of indicators (critical and noncritical) through a single value.

The set of critical indicators is formed by I_C the indicators

$$\left\{C_{I_1}\,;\,C_{I_2}\,;\,C_{I3}\,;\ldots;C_{IN}\right\} \tag{1}$$

Since the critical indicators have the ability to compromise the entire potential risk control of the system, as well as they need to be represented by a mean, the most appropriate way is to represent them as a geometric mean. The geometric mean is the nth root of the product of N terms, representing a mean value of the product. Thus, to represent a mean of N terms, we have:

$$\overline{C}_I = \sqrt[N]{\prod_{i=1}^{N} C_{Ii}} \tag{2}$$

So, if any of the indicators has zero value, the value of I_C will be zero, independent of the other indicators. On the other hand, the maximum value is, numerically, equal to the

maximum value of an indicator, ie, regardless of the number of indicators that is selected, the result will always be in the same range of variation.

The set of non-critical indicators is formed by the I_{NC} indicators.

$$\left\{NC_{I_1}\ ;\ NC_{I_2}\ ;\ NC_{I_3}\ ;...;NC_N\right\} \tag{3}$$

Once the non-critical indicators do not have the ability to, individually, represent the commitment of all the system potential risks control, cannot have its mean represented by a multiplicand. However, they also need to be represented by a mean, so that the representative value of the set is equal, at most, to the maximum value of one of its elements and is within a known range of variation.

Therefore, the best way to represent them is through an arithmetic mean. The non-critical indicators (INC) can be represented by a simple arithmetic average, because it can only be zero, if all control indicators are non-existent.

$$\overline{NC}_I = \frac{\sum_{j=1}^{M} NC_j}{M} \tag{4}$$

The function risk control (RC), which represents the result of the indicators of risks control, should be represented as the geometric mean, ie:

$$R_C\left(C_I, NC_I\right) = \sqrt{\overline{C} \times NC} \tag{5}$$

Once more, we used the geometric mean, so that the risk control (RC) is in a range of variation known in advance and that depends only on the variation of I_C and I_{NC}.

Taking the risk control (RC) as the independent variable, the function that best represent the relationship of cause and effect between risk control and potential risk is the exponential function, with the following form:

$$P_R(R_C) = e^{-R_c} \tag{6}$$

PR (RC) - Potential risk function, which is dependent on the risk control function, will be referred to as PR; RC - Risk control, function that determines the potential risk and that, on the other hand, is determined by the indicators of risk control.

The shape of the exponential function, with a rapid decrease, represents a good model for critical phenomena, as is the case of the potential risk for health services. The complex relationship between the various factors that influence in the risk control exhibits a kind of not extensive sum, where the potential risk for an event, involving the junction between two factors, can be greater than the sum of the potential risk of the two factors separately.

This type of behavior ends up generating a sudden increase of the potential risk, when adding many elements or some critics, being perfectly represented by the rapid decrease of the exponential function.

Another important behavior of the exponential function, to represent the potential risk, is that it has a finite maximum value and the minimum value tends to zero, without necessarily assuming the zero value. The potential risk of a system cannot increase indefinitely, and cannot be zero. Its possibility of occurrence is finite and, for bigger and better that it is the risk control system, you cannot reach a situation of absence of potential risk.

The function proposed in this article, represented by equation (6), allows the potential risk to vary between the maximum value 1 and the minimum value that will be defined by the risk control indicator. The minimum value, will never be zero and, regardless of the number of indicators that it is used, the potential risk function will have fixed maximum and minimum values.

So, an important issue in this model is to establish the range of variation of the risk control indicators, as the maximum scale value defines the minimum value that the potential risk function (PR) can take and, consequently, its range of variation. It is worth noting that the potential risk assessments with this model can only be compared, if they use the same scale of variation of the risk control indicators.

The I_C and I_{NC} indicators are evaluated, on a scale of zero to five, where zero represents non-existent or inadequate risk control and five represents risk control excellent, with the following degrees: 0 – absent or inadequate; 1 – poorly; 2 – reasonable; 3 – good; 4 – great and 5 – excellent.

One should consider that the compliance with the rule is associated with the value 3. Thus, regardless of the number of critical and non-critical indicators, the risk control function (RC) will assume values, necessarily, between 0 and 5. Then, the maximum and minimum values of the potential risk (PR) will be:

$$P_R(R_C=0) = e^{-0} = 1{,}000 \tag{7}$$

$$P_R(R_C=5) = e^{-5} = 0{,}007 \tag{8}$$

When RC = 0, which means the absence of the set of non-critical risk controls or the absence of one of the critical risks controls, the potential risk will be PR (0) = 1, ie, there is a full potential risk situation. One can describe the possible potential damage; yet one can not specify a damage and its associated probability of occurrence. On the other hand, for greater that are the controls, the potential risk (PR) will never assume the zero value.

So, one can insert or remove as many risk control indicators as may be necessary, whether they are critical indicators or not, there will be no change in the variation of the function ($0.007 \leq PR \leq 1.000$).

The exponential function proves to be adequate to describe risk control systems, because it reflects well the concept of risks inherent to the technologies, ie, the risk can and should be minimized ever more, but can not be totally eliminated, because it is part of the technology itself. Ie, even if they have implemented all risk control mechanisms, it has a minimum potential risk value (intrinsic), which can not be eliminated, being that the benefits justify the use of this technology for health.

The RC function can also be understood as the relationship between the macro and micro indicators of the service. The means I_C and I_{NC} contain all the information service, so that they behave as if they were the micro systems states, that compose a given health service, determined by the individual indicators I_C and I_{NC}. Through them, we can know the situation of the equipment, of the human resources or of the procedures, while RC reports a macro value, aggregated, indicating the situation of the total risk control service, but nothing about its components, specifically. Both, RC and I_C or $I_{CN,}$ are of fundamental importance for the understanding of the risk control situation, depending on who is looking and what you want to analyze.

As the potential risk (PR) cannot be understood only as a dimensionless number more information are needed to support a decision making. As a way to aggregate the dimension acceptability, the potential risk should be represented within an area of potential risk with their respective bands of acceptability, as shown in Figure 5.

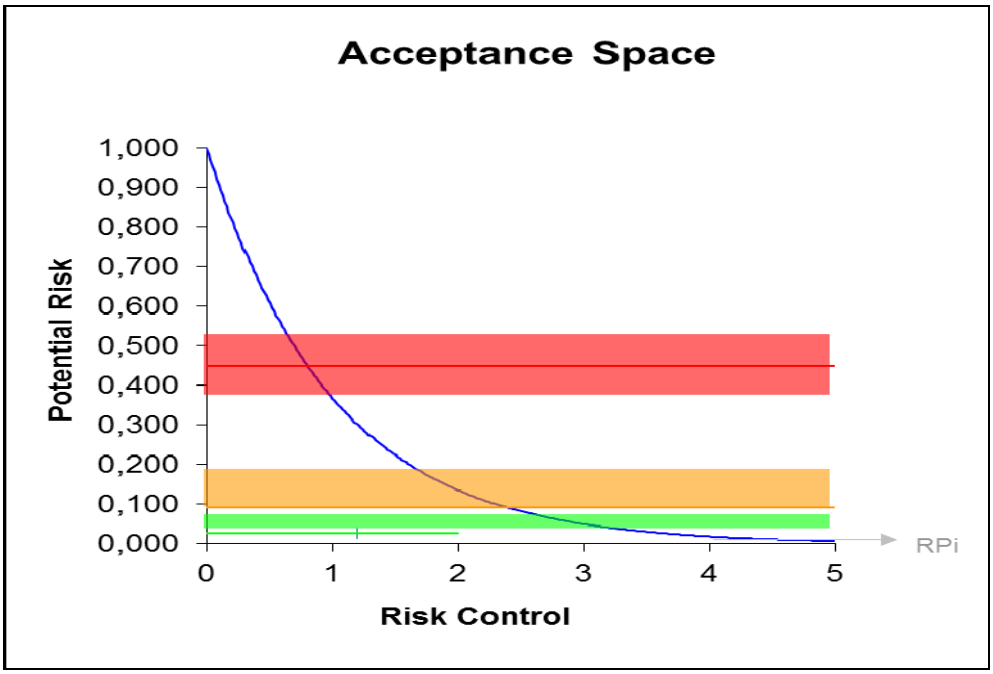

Fig. 5. Risk acceptance space of the PRAM

The idea of risks space was first proposed by Slovic et al. (1979), to perform a comparison of the perception of different types of risks and how experts and lay people perceive risks, by using psychometry to quantify the technologies, understood, in the broadest sense, such as equipment, products, processes or practices.

As there is a possibility of more than one evaluation with the same value of potential risk, causing a point overlap in the spatial representation, you can add a pie chart, so that you can see the number of services / procedures evaluated.

The IRGC "International Risk Governance Council" in the "white paper nº2", of 2006, proposes a bidimensional graphical representation to classify the risk levels of the nanotechnologies, using a non-linear representation, ranges of acceptability and a undefined region between the lower limit of the curve and the X-axis. It is a qualitative representation without estimation of values, which is meant to represent the shape of risks behavior in nanotechnology and its acceptability (IRGC, 2006). The work points to the need for quantitative graphical representation, which seems to have bumped in the difficulty to mathematically formulate the model. This difficulty was surpassed with the presented formulation of potential risk.

7. Conclusion

The concept of potential risk regards the possibility of occurrence of a health problem, without necessarily describing the injury and its probability of occurrence. It is a concept that expresses the value judgment about potential exposure to a possible risk. It's like representing the risk of the risk.

An important aspect of the concept of potential risk refers to the temporal dimension of causal relationships. While the classical risk has its basis of evaluation in occurred events, the potential risk has its causal bases of evaluation in the events that are occurring and in the effects that may, or may not, occur in the future. Thus, allows working with the temporal dimension of risk facing the future or a meta-reality and not the past.

In the case of the inspections of the health regulatory authorities, the central element in risk management should be the potential risk that, although not representing, necessarily, a defined relation of cause and effect, can be quantified and classified into levels of acceptability, as discussed in the presented model.

However, the potential risk, as the classical risk, can not be represented, only, by a number. It should be understood and evaluated within a context and with limits of acceptability established by the technical and social determinants. Therefore, the evaluations made by regulatory authorities in the process of risk management as indicators have, in most cases, the tools of risk control and as a consequence, a measure of potential risk, which will indicate whether the control conditions are acceptable or not.

8. Acknowledgments

This publication was financed by the Federal Institute of Education, Science and Technology of Bahia

This study is part of INCT-Citecs funded by the National Intitutes of Science and Technology Programme (MCT-CNPq, Brazil). Contract no. 57386/2008-9.

The authors thank especially Drs. Gunter Drexler and Ediná Alves Costa.

9. References

Almeida Filho, N. *A ciência da saúde*. São Paulo: Hucitec, 2000.

_____. O conceito de saúde e a vigilância sanitária: notas para a compreensão de um conjunto organizado de práticas de saúde. In: Costa, E. A. (Org.). *Vigilância sanitária: desvendando o enigma*. Salvador: EDUFBA, 2008. p. 19-43.

Beck, U. World risck Society. Cambridge: Polity Press, 2003.

Costa, E. A. Vigilância sanitária: proteção e defesa da saúde. In: Rouquayrol, M.Z.; Almeida Filho, N. *Epidemiologia & saúde*. São Paulo: Medsi, 2003. p. 357-87.

_____. *Vigilância sanitária: proteção e defesa da saúde.* São Paulo: Sobravime, 2004.

Covello, V. T., Munpower, J. Risk analysis and risk management: an historical perspective. *Risk Analysis,* v. 5, n. 2, 1985.

Czeresnia, D. Ciência, Técnica e Cultura: relações entre riscos e práticas de saúde. *Cadernos de Saúde Pública,* São Paulo, *v.* 20, n. 2, p. 447-455, 2004.

Fischhoff, B et al. *Acceptable risk.* Cambridge: Cambridge University Press, 1983.

Fischhoff, B; Bostrum, A; Quadrel, M. J.Risk perception and communication. In: Detels, Roger et al. *Oxford Textbook of Public Health.* 4 th. New York: Oxford University Press, 2005. v.1.

Gelman, A.; Nolan, D. *Teaching statistic a bag of tricks.* London: Oxford, 2004.

Hampel, J. Different concepts of risk: a challenge for risk commnication. *International Journal of Microbiology*, n. 296, p. 5-10, 2006.

Hood, C.; Rothstein H.; Baldwin, R. *The government of risk: understanding risk regulation regimes.* New York: Oxford Univerty Press, 2004.

IRGC/International Risk Governance Council. *White Paper on Nanotechnology.* Geneva, 2006.

Kolluru, R. Risk assessment and management: a unified approach. In: KOLLURU R.et al. (Org.). *Risk assessment and management handbook*: for environmental, health and safety professionals. Boston: McGraw Hill, 1996. p. 3-41.

Lippmann, M.; Cohen, B. S.; Schlesinger, R. B. *Enviromental health science.* Oxford: 2003.

Lucchese, G. Globalização e regulação sanitária: os rumos da vigilância sanitária no Brasil. 2001. Tese (Doutorado em Saúde Pública) – Escola Nacional de Saúde Pública, Fiocruz, Rio de Janeiro.

National Research Council (United States of America). *Risk assessment in the government: managing the process*. Washington DC: National Academy Press, 1983.

Oberkampf, W. L.et al. Challenge problems: uncertainty in system response given uncertain parameters. *Reliability Engineering and System Safety*, v. 85, p. 11–19, 2004.

Omenn, G. S.; Faustman, E. M. Risk assessment and risk manegement. In: DETELS, Roger et al. *Oxford textbook of public health.* 4 th New York: Oxford University Press, 2005.

Shaw IS, Simões MG. *Controle e modelagem fuzzy*. São Paulo: Editora Edgard Blücher; 1999.

Slovic, P. *The perception of risk.* London: Earthscan, 2000.

Triola, M. F. *Introdução à estatística.* Rio de Janeiro: LTC, 2005.

Vieira Da Silva, L. M. Conceitos, abordagens e estratégias para a avaliação em saúde. In: Hartz, Zulmira M. de A.; Vieira Da Silva, L. M. (Org.). *Avaliação em saúde: dos modelos teóricos à prática na avaliação de programas e sistemas de saúde*. Salvador: Edufba; Rio de Janeiro: Fiocruz, 2005, p. 15 – 39.

Weber L, Klain Pat. Aplicação da lógica *fuzzy* em software e hardware. Canoas: Editora Ulbra; 2003

Zadeh L.A. *Fuzzy* sets. Information and Control 1965; 8:338-353

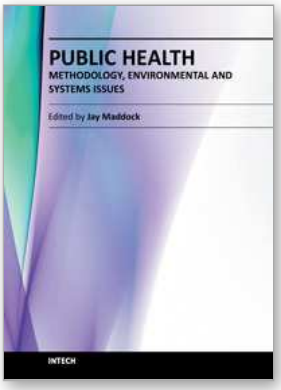

Public Health - Methodology, Environmental and Systems Issues

Edited by Prof. Jay Maddock

ISBN 978-953-51-0641-8

Hard cover, 432 pages

Publisher InTech

Published online 30, May, 2012

Published in print edition May, 2012

Public health can be thought of as a series of complex systems. Many things that individual living in high income countries take for granted like the control of infectious disease, clean, potable water, low infant mortality rates require a high functioning systems comprised of numerous actors, locations and interactions to work. Many people only notice public health when that system fails. This book explores several systems in public health including aspects of the food system, health care system and emerging issues including waste minimization in nanosilver. Several chapters address global health concerns including non-communicable disease prevention, poverty and health-longevity medicine. The book also presents several novel methodologies for better modeling and assessment of essential public health issues.

How to reference

In order to correctly reference this scholarly work, feel free to copy and paste the following:

Handerson J. Dourado Leite and Marcus V. Teixeira Navarro (2012). Potential Risk: A New Approach, Public Health - Methodology, Environmental and Systems Issues, Prof. Jay Maddock (Ed.), ISBN: 978-953-51-0641-8, InTech, Available from: http://www.intechopen.com/books/public-health-methodology-environmental-and-systems-issues/potential-risk-a-new-approach

INTECH

open science | open minds

InTech Europe

University Campus STeP Ri

Slavka Krautzeka 83/A

51000 Rijeka, Croatia

Phone: +385 (51) 770 447

Fax: +385 (51) 686 166

www.intechopen.com

InTech China

Unit 405, Office Block, Hotel Equatorial Shanghai

No.65, Yan An Road (West), Shanghai, 200040, China

中国上海市延安西路65号上海国际贵都大饭店办公楼405单元

Phone: +86-21-62489820

Fax: +86-21-62489821